机型版本号: Ver.B

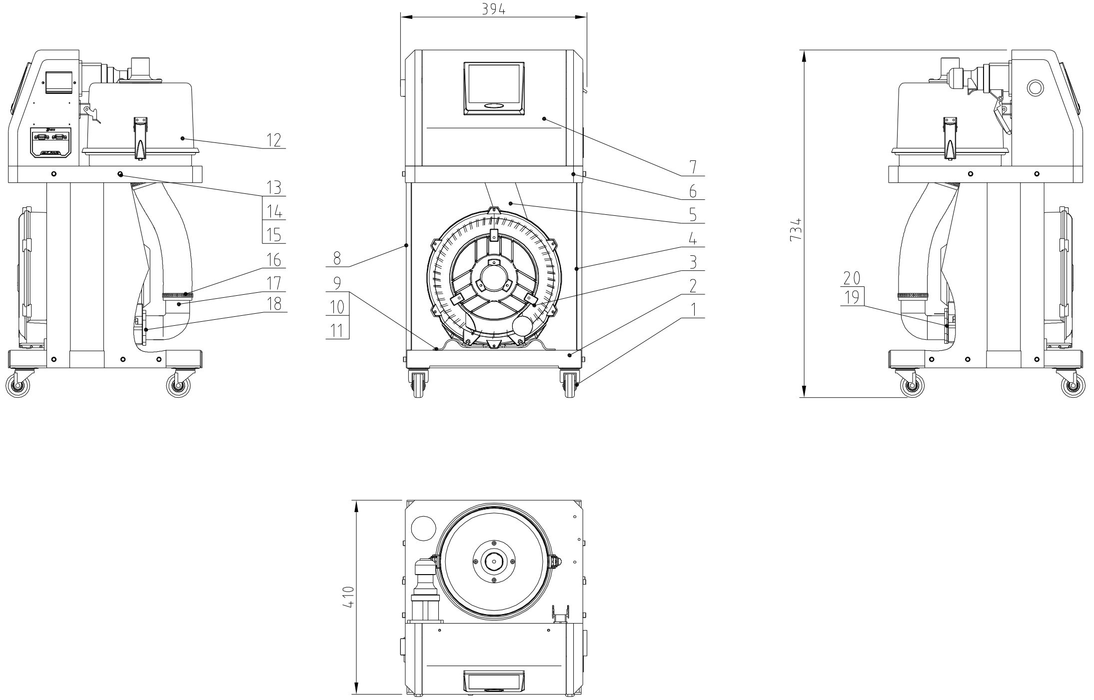

Tech. Req.:

1.Main performance parameters:

a. Throughput 300kg/hr (Tested material's bulk density: 0.65kg/L)

b. Machine power: 3Ç, 400VAc, 50Hz;

c. High-pressure blower power: 0.75kW;

No.	Part No.	Name	Material	Num.	Remarks
20		Foot pipe pressing screen	Q235	1	
19		Foot pipe pressing screen sheet	SPCC2.5	1	
18	YR10001000000	Motor suction port tightener 1HP	Rubber	1	
17	YR40004700000	Air suction pipe elbow	ABS	1	
16	YW02002500000	Pipe clamp Ø57	Assembly	2	
15	YW65006000100	Standard spring washer GB/T93 6-Longzine		10	
14	YW66061300000	Flat gasket A grade GB/T97.1 6-Longzine		10	
13	YW60061500100	Hexagon screw bolt GB/T5783 M6x10-4.8-Longzine		10	
12		Filter assembly	Assembly	1	
11	YW65008000100	Standard spring washer GB/T93 8-Longzine		4	
10	YW66082200100	Large washer C grade GB/T968(8.4x24x2)-Longzine		4	
9	YW60081600100	Hexagon screw bolt GB/T5781 M8x16-4.8-Longzine		4	
8		Right side plate	SPCC2.0	1	
7		Control box	Assembly	1	
6		Fixed bracket	Assembly	1	
5	YR60500700100	Steel wire ext. PUR hose 2''	PUR	0.35m	
4		Left side plate	SPCC2.0	1	
3	BM30031000150	Shini blower RB-310/1HP3 phase 230V/400V/50/60HZ blk.	Assembly	1	
2		Base	SPCC2.0	1	
1	YW03000200000	Black castor 2''	Assembly	4	

Mark	Before modification	After modification	Modified by	Modify date			
					Drawer		Version
					Designer		Approved by
					Proofread by		
					Checked by		Date

Title: SAL-810G

"Standard" Separate-vacuum Hopper Loader

Drawing NO.: SAL-810G-ALL

Scale: 1:10

Num.: 1

Material: Assembly

Surface

Material number

SHINI 信易電熱機械股份有限公司 Shini Plastics Technologies, Inc.

机型版本号: Ver.A

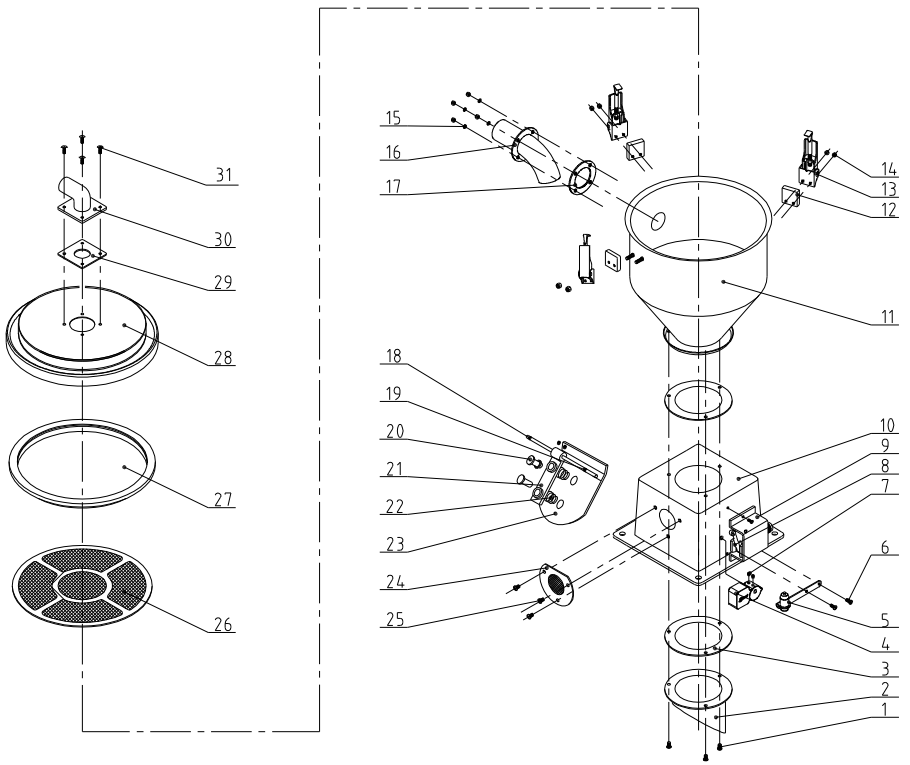

No.	Part No.	Name	Material	Num.	Remarks
31	YW62051500000	Large cross socket flat head screw JIS1111 M5×16-Longzine		4	
30	BA20001500020	Air suction pipe	YL112	1	
29	YR10000000200	Air suction pipe fastener (has mould)	Rubber	1	
28	BL21000600420	Hopper cover	SPCC1.5	1	
27	YR10000300100	Hopper fastener	Rubber	1	
26	BL21000600620	Filter screen	Assembly	1	
25	YW62061000000	Large cross socket flat head screw JIS1111 M6×10-Longzine		7	
24	YR40002400100	Vacuum hopper receiver plastic exhaust window SMH-6L-A-32 ver.01(white)(has mould)	Assembly	1	
23	YW10000000100	Mat. discharge plate	SUS201	1	
22	YW01033000000	Mat. discharge plate spring		2	
21	BW20000100010	Alu. accessories	YL112	1	
20	YW01033000000	Mat. discharge plate rivet	Q235A	2	
19	YW66000300000	Open check ring GB/T896.3		2	
18	BH10061400040	Iron rod	Q235A	1	
17	YR10061200000	Inlet pipe fastener	Rubber	1	
16	BL32000600020	Inlet pipe	SUS201	1	
15	YW66041000000	Flat washer A grade GB/T97.1 4(4.5×9×0.8)-Longzine		4	
14	YW64040700100	Non-metal insert hex. lock nut GB/T889.1 M4		10	
13	YW02003000400	Spring fastener	Assembly	3	
12	YR40000600300	Spring fastener washer	ABS	3	
11		Material storage tank	SUS304	1	
10	BA10040000210	Square base (thin type)	YL112	1	
9	YR40000600600	Micro switch box	ABS	1	
8	YE14511200000	Micro switch LXW5-11G2		1	
7	YW68005500000	Inner. hex. flat end lock screw GB/T77 M5×5-Longzine		4	
6	YW63041200100	Large cross socket pan head screw GB/T-818 M4×12-Longzine		3	
5	BH10000600050	Pin lift mechanism	Assembly	1	
4	YW20602100000	With heavy-hammer	Zinc alloy	1	
3	YR10000000600	Base fastener	Rubber	2	
2	BL20333600020	Silical hole	SUS304	1	
1	YW62052000000	Large cross socket flat head screw JIS1111 M5×20-Longzine		3	

Tech. Req.:
1.Main parameters:
a.Storage hopper capacity:6L
b.Air source: 4-6kgf/cm^2
c.Voltage: DC24V

Mark	Before modification	After modification	Modified by		Drawer		Version	
					Designer		Approved by	
					Proofread by			
					Checked by		Date	

Title: SMH-6L Vacuum Hopper Receiver

SMH-6L-A-ALL

Proportion: 1:8 | Num.: 1 | Material: Assembly | Surface | Material number

SHINI 信易電熱機械股份有限公司 Shini Plastics Technologies, Inc.

机型版本号	Ver.B

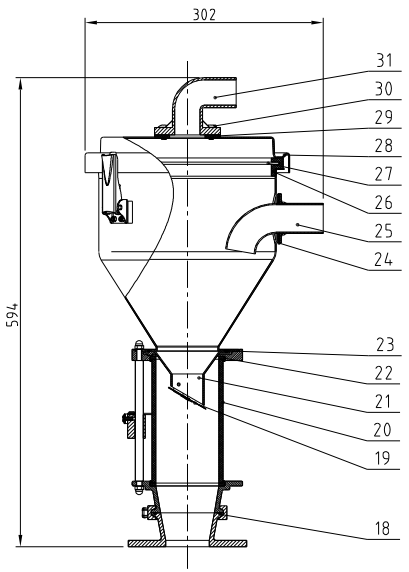

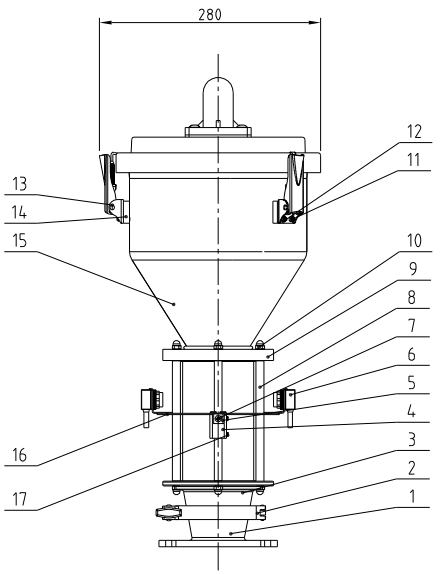

No.	Part No.	Name	Material	Num.	Remarks
31	BW20001500010	Air suction pipe	YL112	1	
30	YW62051500000	Large cross socket flat head screw JIS1111 M5×16-Longzine		4	
29	YR10000000200	Air suction pipe fastener	Rubber	1	
28	BL21000602820	Hopper cover	SUS304	1	
27	BL21000600620	Filter screen	SUS201	1	
26	YR10000300100	Hopper fastener	Rubber	1	
25	BL32000600020	Inlet pipe	SUS201	1	
24	YR10061200000	Inlet pipe fastener	Rubber	1	
23	YR20259800000	Rubber O-type seal ring 2.5×98	Rubber	1	
22	YR10060200000	Glass pipe fastener	Silical gel	2	
21	BW32006700810	Mat. discharge port	Assembly	1	
20	YW70317000600	Glass pipe	Glass	1	
19	BL21000602720	Non-return piece	Assembly	1	
18	YR20802600000	Rubber O-type seal ring 80 (inner dia.)×2.65	Rubber	1	
17	YW68004500000	Inner hex. flat end lock screw GB/T77 M4×5-Longzine		2	
16		Photo sensor fixed piece	SPCC1.5	1	
15		Material storage hopper	SUS304	1	
14	YR40000600300	Snap hook washer	ABS	3	
13	YW02003000400	Snap hook	Assembly	3	
12	YW66041000000	Flat washer A grade GB/T97.1 4(4.5×9×0.8)-Longzine		8	
11	YW64040700100	Non-metal insert hex. lock nut GB/T889.1 M4		8	
10	YW64006000100	Hex. cap nut GB/T923 M6-A2-70(SUS)		6	
9	BH13062400200	Glass pipe upper flange	YL112	1	
8	BH10000600640	Flange connecting rod	Q235A	3	
7	YW63041200100	Cross socket pan head screw GB/T-818 M4×12-Longzine		3	
6	YE15143900000	Photosensor FOTEK T18-3MN-PE	Assembly	1 pair	
5	YW31616200000	Photosensor cable pressure block	SUS201	1	
4	BL90001000120	Photosensor fixed base	YL112	1	
3	BH13062600200	Glass pipe lower flange	YL112	1	
2	YW07000300000	3" stainless steel pipe clamp	SUS202	1	
1	BH13060100200	Mount flange	YL112	1	

Tech. Req:

1.Main parameters:

a.Storage hopper capacity:6L

b.Air source: 4-6kgf/cm^2

c.Voltage: DC24V

Mark	Before modification	After modification	Modified by	Modify date

Drawer		Version	
Designer		Approved by	
Proofread by			
Checked by		Date	

Title: SVH-6L

Photosensor Hopper Receiver

Drawing NO.: SVH-6L-ALL

Prop.: 1:6 | Num.: 1 | Material: Assembly | Surface | Material number

SHINI 信易電熱機械股份有限公司 Shini Plastics Technologies, Inc.

机型版本号	Ver.B

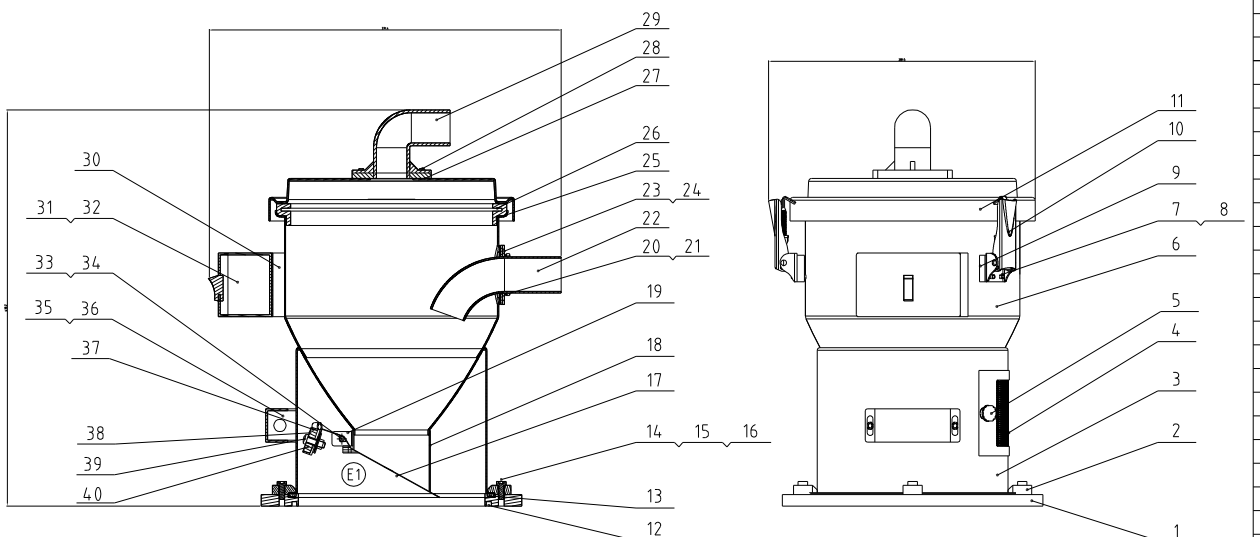

No.	Part No.	Name	Material	Num.	Remarks
40	BL21000600120	Magnet cover	SUS201	1	
39	YW63062000000	Cross socket pan head screw GB/T-818 M6x20		1	
38	YW90257700000	Permanent magnet Φ25×Φ7×7	Permanent Magnet	1	
37	BH12000600010	Magnet sleeve	H58	1	
36	YW63061000000	Cross socket pan head screw GB/T-818 M6x10		2	
35	YR40000601100	Sensor shell	ABS	1	
34	YW63034000000	Cross socket pan head screw GB/T-818 M3x40		1	
33	YW64000300000	Lock nut M3		1	
32	YW63040600000	Cross socket pan head screw GB/T-818 M4x6		2	
31	YR40010000200	Control box	ABS	1	
30		Control box base	SUS201	1	
29	BW20001500010	Air suction pipe	YL12	1	
28	YW62051500000	Large cross socket flat head screw JIS1111 M5×16-Longzine		4	
27	YR10000000200	Air suction pipe fastener	Rubber	1	
26	BL21000600620	Filter screen	SUS201	1	
25	YR10000300100	Hopper fastener	Rubber	1	
24	YR10061200000	Inlet pipe fastener	Rubber	1	
23	BL20036000320	1.5'' Inlet pipe fixed piece	SUS201	1	
22	BL32000600020	Inlet pipe	SUS201	1	
21	YW66040800000	Flat washer A grade GB/T97.1 4(4.5X9X0.8)		4	
20	YW64040700100	Non-metal insert hex. lock nut GB/T889.1 M4		4	
19	BL21000601120	Mat. discharge plate fixed base	SUS201	1	
18	BL21000600720	Mat. discharge port	SUS201	1	
17	BL21000602320	Mat. discharge plate	SUS201	1	
16	YW66061300000	Flat washer A grade GB/T97.1 6-Longzine		8	
15	YW65006000000	Standard spring washer GB/T93 6-Longzine		8	
14	YW61062000300	Inner hex. column head screw GB/T 70.1 M6x20-Longzine		6	
13		Base fastener	EVA3.0	1	
12	YR20205500000	O-type seal ring inner dia. Φ200×5.5	Rubber	1	
11		Hopper cover	SUS201	1	
10	YW02003000400	Adjustable snap hook SAL-6U-A-35	Assembly	3	
9	YR40000600800	Snap hook washer SAL-6U	ABS	3	
8	YW66040800000	Flat washer A grade GB/T97.1 4(4.5X9X0.8)-Longzine		10	
7	YW64040700100	Non-metal insert hex. lock nut GB/T889.1 M4		10	
6		Material storage hopper	SUS304	1	
5	YR40061500000	Star handle	Assembly	2	
4	YR40000601000	Vent window	ABS	1	
3	BL27000601320	Hopper fixed base	SUS304	1	
2	YW20000600500	Pressing block	YL112	4	
1	YW20006000000	Base	YL112	1	

Mark	Before modification	After modification	Modified by	Modify date	Drawer		Version	
					Designer		Approved by	
					Proofread by			
					Checked by		Date	

Title: SHR-6U Assembly Drawing

Drawing NO: SHR-6U-A-ALL

Prop. 1:5 | Num. 1 | Material: Assembly | Surface | Material number

SHINI 信易電熱機械股份有限公司 Shini Plastics Technologies, Inc.

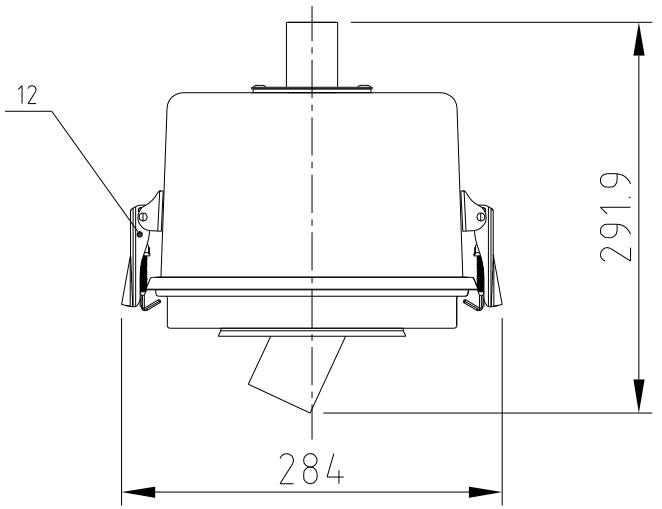

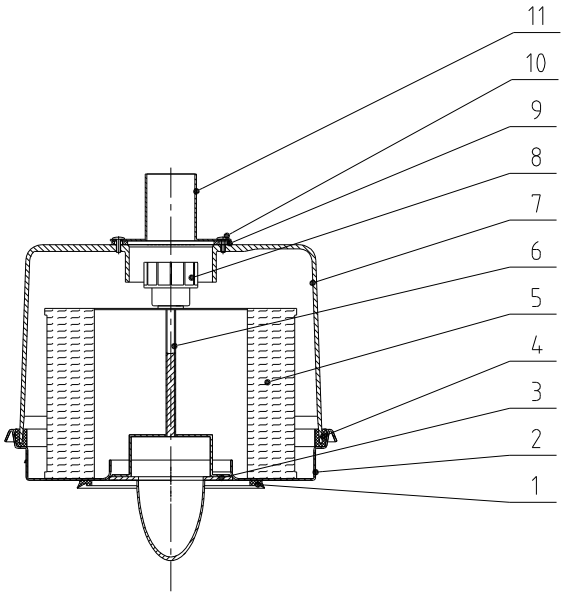

No.	Material number	Name	Mat.	Num.	Remarks
12	YW02003000400	Adjustable spring hook SAL-6U-A-35	Assembly	2	
11		Filter barrel suction flange	SUS201	1	
10	YW67041200600	Cross socket pan head self-tapping screw M4x12		4	
9	YR10243600000	Suction pipe round fastener SAL-24U/36U	Rubber	1	
8	YW09675100000	Small star nut 5/16 SHD-6～75KG-01-SJ	Alu. alloy	1	
7	YL22081000000	Transparent filter	PC	1	
6	BL20333640320	Filter barrel base	Assembly	1	
5	YR50708000100	Filter	Assembly	1	
4	YR10080000300	Filter barrel fastener	Rubber	1	
3	YR10243600000	Suction pipe round fastener SAL-24U/36U	Rubber	1	
2	BL20070000720	Filter barrel cover	SPCC1.5	1	
1	YR10080000000	Fastener	Rubber	1	

Mark	Before Mark	After Mod.	Modified by	Date				
					Draw.		Ver.	
					Desi.		App. by	
					Check			
					App.		Date	

Title: SAL-810G
Filter Barrel Assembly

Drawing no.: SAL-810G-A-ALL

Scale: 1:5 | Num.: 1 | Mat.: Assembly | Surface req. | Mat No.

SHINI 信易電熱機械股份有限公司 Shini Plastics Technologies, Inc.

机型版本号: Ver.B

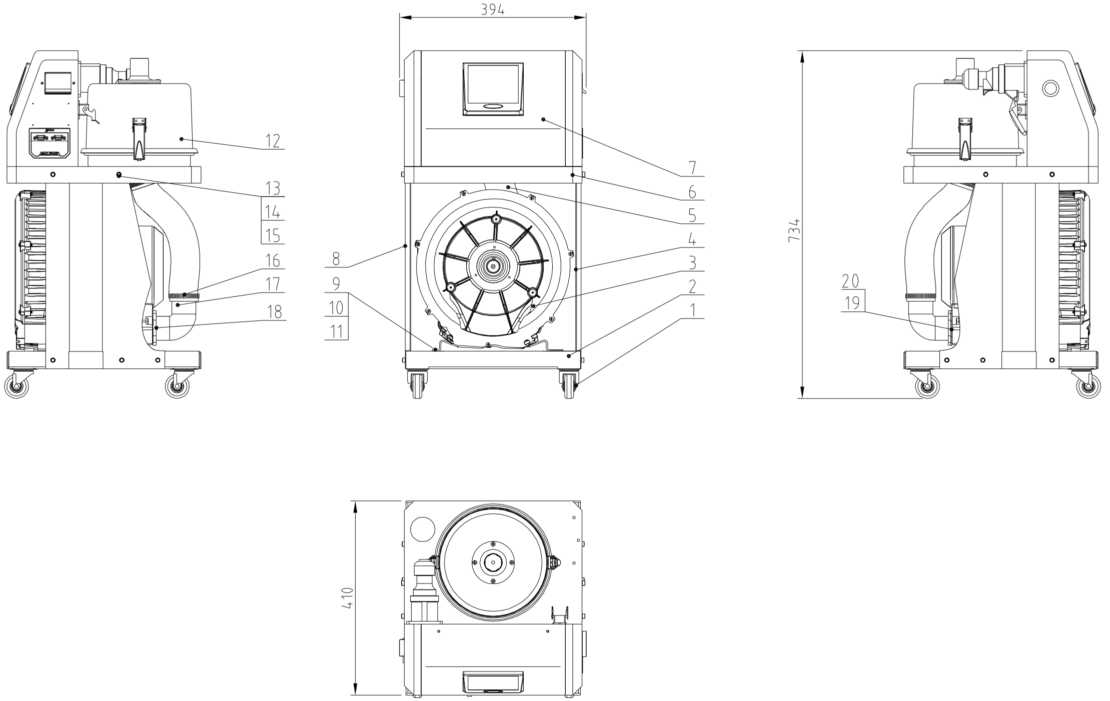

No.	Part No.	Name	Material	Num.	Remarks
20		Foot pipe pressing screen	SPCC2.5	1	
19		Foot pipe pressing screen sheet	Q235	1	
18	YR10002000000	Motor suction port tightener 2HP	Rubber		
17	YR40020000000	Air suction pipe elbow	ABS	1	
16	YW02002500000	Pipe clamp Ø57	Assembly	2	
15	YW65006000100	Standard spring washer GB/T93 6-Longzine		10	
14	YW66061300000	Flat gasket A grade GB/T97.1 6-Longzine		10	
13	YW60061500100	Hexagon screw bolt GB/T5783 M6x10-4.8-Longzine		10	
12		Filter assembly	Assembly	1	
11	YW65008000100	Standard spring washer GB/T93 8-Longzine		4	
10	YW66082200100	Large washer C grade GB/T968(8.4x24x2)-Longzine		4	
9	YW60081600100	Hexagon screw bolt GB/T5781 M8x16-4.8-Longzine		4	
8		Right side plate	SPCC2.0	1	
7		Control box	Assembly	1	
6		Fixed bracket	Assembly	1	
5	YR60500700100	Steel wire ext. PUR hose 2''	PUR	0.35m	
4		Left side plate	SPCC2.0	1	
3	BM30042000050	Shini blower RB-420/2HP3 phase 230V/400V/50/60HZ blk.	Assembly	1	
2		Base	SPCC2.0	1	
1	YW03000200000	Black castor 2''	Assembly	4	

Tech. Req.:

1.Main performance parameters:

a. Throughput 500kg/hr (Tested material's bulk density: 0.65kg/L)

b. Machine power: 3Ø, 400VAc, 50Hz;

c. High-pressure blower power: 1.5kW;

Mark	Before modification	After modification	Modified by	Modify date	Drawer		Version	
					Designer		Approved by	
					Proofread by			
					Checked by		Date	

Title: SAL-820G

"Standard" Separate-vacuum Hopper Loader

Drawing NO. SAL-820G-ALL

Scale: 1:10 | Num.: 1 | Material: Assembly | Surface | Material number

信易電熱機械股份有限公司
Shini Plastics Technologies, Inc.

机型版本号	Ver.A

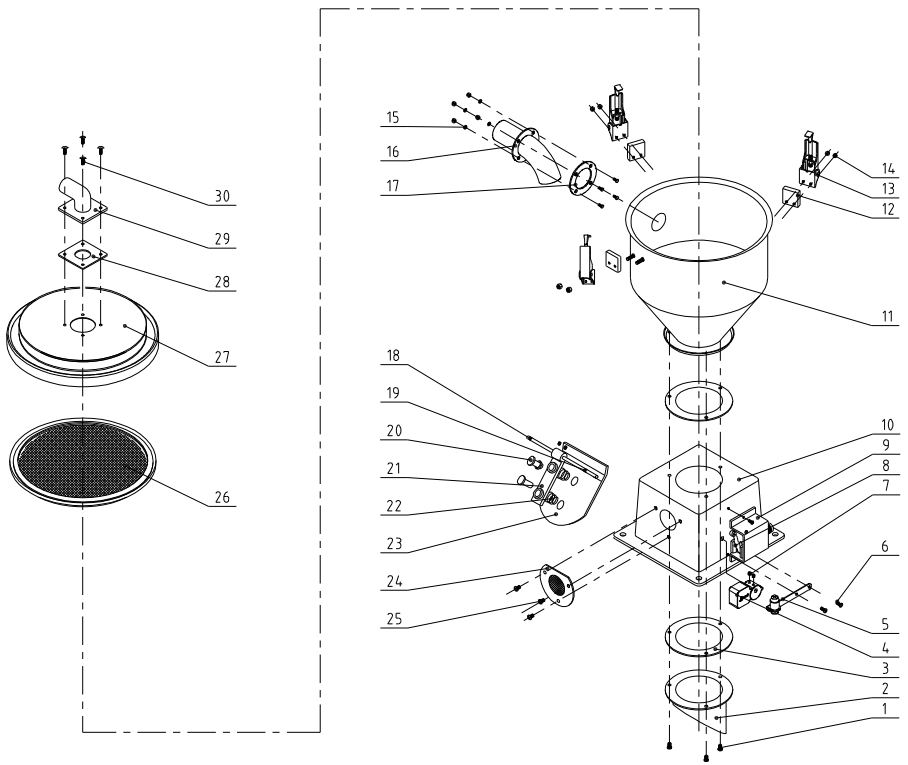

序号	代号	名称	材质	数量	备注
30	YW62051500000	Cross recessed pan head screw M5×16	4.8	4	
29		Air suction pipe	YL112	1	BA20001500020 Borrowed
28	YR10000000200	Air suction pipe tighten	Rubber	1	
27		Hopper cover	SPCC1.5	1	BL21001202220
26	YR10121200300	Integrated filter screen	Assembly	1	Borrowed
25	YW62061000000	Cross recessed pan head screw M6×10	4.8	3	
24	YR40002400000	Air vent window	Assembly	1	
23		Discharging plate	SUS201	1	YW10000000100 Borrowed
22	YW01033000000	Snap hook	65Mn	2	
21		Aluminum accessories	YL112	1	BW20000100010 Borrowed
20		Drop plate rivets	Q235A	2	YW01033000000 Borrowed
19	YW66000300000	Open check ring 5	65Mn	2	
18		Pontil	Q235A	1	BH10061400040 Borrowed
17		Material inlet pipe seal	Rubber	1	YR10061200000 Borrowed
16		Material inlet pipe	SUS201	1	BL32000600020 Borrowed
15	YW66040800000	Flat washer 4	100HV	4	
14	YW64040700100	Locking nutM4×0.7	04	10	
13		Spring buckle	Assembly	3	YW02003000400 Borrowed
12	YR40000600800	Snap hook block	ABS	3	
11		Material storage tank	SUS304	1	
10		Four sided base (reduced thickness)	YL112	1	BA10040000210 Borrowed
9		Microswitch box	ABS	1	YR40000600600 Borrowed
8	YE14511200000	Microswitch box LXW5-11G2	Assembly	1	
7	YW68005500000	Lock screw M5×5	4.8	4	
6	YW63041000000	Cross recessed pan head screw M4×10	4.8	3	
5		Ejector pin assembly	Assembly	1	BH10000600050 Borrowed
4		Counterweight hammer	Zinc alloy	1	YW20602100000 Borrowed
3	YR10000000600	Base forced tight	Rubber	2	
2		Grit hole	ADC12	1	YW20330100120 Borrowed
1	YW62052000000	Cross recessed pan head screw M5×20	4.8	3	

Technical Requirements:

1. Main performance parameters:

a. The storage hopper has a capacity of 12L.

2. Assembly requirements:

a. During assembly, adjust the opening of the feeding plate and the discharge port by about 8mm.

标记	更改前	更改后	更改人	日期				
					制图		版号	G
					设计		核准	
					校对			
					审核		日期	20110829

标题	SMH-12L 真空料斗	图号	SMH-12L-A-ALL
比例	1:8	数量	1
材质	组件	表面要求	
物料号			

SHINI 信昌電熱機械股份有限公司 Shini Plastics Technologies, Inc.

机型版本号	Ver.A

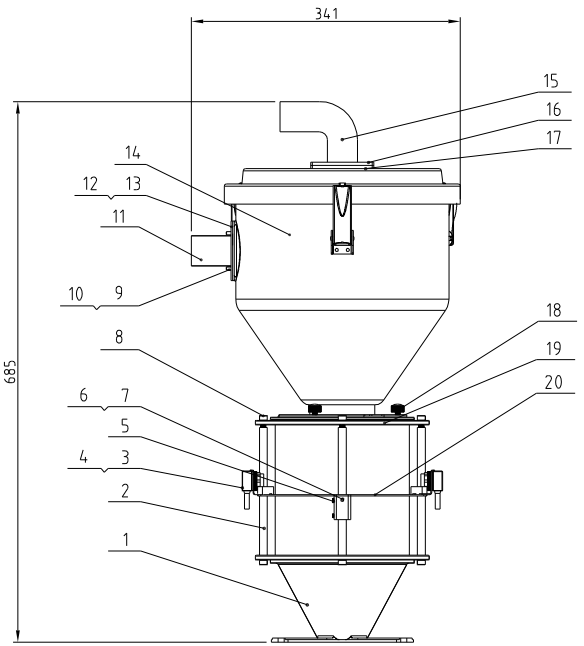

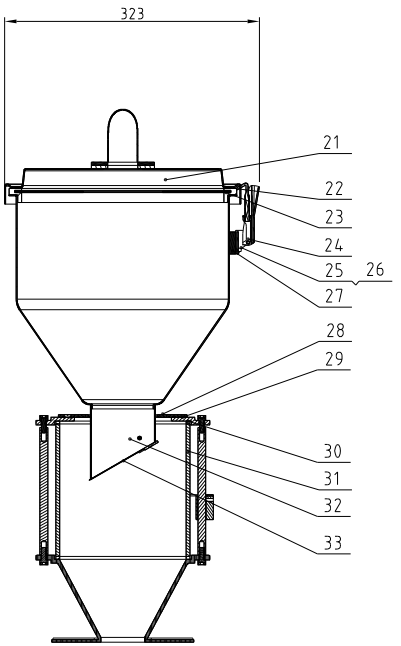

No.	Part No.	Name	Material	Num.	Remarks
33	BL21001200520	Non-return piece	SUS201	1	
32	BL27001200720	Mat. discharge port	SUS201	1	
31	YW70171700000	Glass pipe Ø170×Ø160×170	Glass	1	
30	YR10001200100	Glass pipe fastener SVH-12L-A-04(ver.0)	Silical gel	2	
29	BL90052003210	Vent flange	SUS201	1	
28	BL21001201220	Hopper flange	SUS202	1	
27	YR40000600800	Snap hook washer SAL-6U	ABS	4	
26	YW66040800000	Flat washer A grade GB/T97.1 4 -Longzine		12	
25	YW64040700100	Non-metal insert hex. lock nut GB/T889.1 M4		12	
24	YW02003000400	Adjustable snap hook	Assembly	4	
23	YR10000600200	Hopper fastener	Rubber	1	
22	BL21001200320	Hopper screen	SUS201	1	
21	BL21120700320	Hopper cover	SUS304	1	
20	BL21001200120	Photo sensor fixed piece	SUS201	1	
19	BW32001200110	Glass pipe upper fastener	SUS202	1	
18	YW69621600000	Manual screw M6×15		3	
17	YR10000000200	Air suction pipe fastener	Rubber	1	
16	YW62051500000	Large cross socket flat head screw JIS1111 M5×16-Longzine		4	
15	BW20001500010	Air suction pipe	YL12	1	
14		Material storage hopper	Assembly	1	
13	YR10000600300	Inlet pipe fastener	Rubber	1	
12	BL20036000320	Inlet pipe fixed piece	SUS201	1	
11	BL32000600020	Inlet pipe	SUS201	1	
10	YW66040800000	Flat washer A grade GB/T97.1 4-Longzine		4	
9	YW64040700100	Non-metal insert hex. lock nut GB/T889.1 M4		4	
8	YW61061601200	Inner hex. column head screw GB/T 70.1 M6×16-Longzine		8	
7	YW31616200000	Photosensor cable pressure block	SUS201	1	
6	YW63041200100	Cross socket pan head screw GB/T-818 M4×12-Longzine		4	
5	YW68004500000	Inner hex. flat end lock screw GB/T77 M4×5-Longzine		2	
4	BL90001000120	Photosensor fixed base	YL12	1	
3	YE15143900000	Photosensor FOTEK T18-3MN-PE	Assembly	1 pair	
2	BH10101600110	Flange connecting rod	Q235A	4	
1	BL21000610710	Glass pipe lower flange	SUS304	1	

Tech. Req:

1.Main parameters:

a.Storage hopper capacity:6L

b.Air source: 4-6kgf/cm^2

c.Voltage: DC24V

Mark	Before modification	After modification	Modified by	Modify date

Drawer		Version	
Designer		Approved by	
Proofread by			
Checked by		Date	

Title: SVH-12L Photosensor Hopper Receiver

Drawing NO: SVH-12L-A-ALL

Prop: 1:6 | Num: 1 | Material: Assembly | Surface | Material number

SHINI 信易電熱機械股份有限公司 Shini Plastics Technologies, Inc.

机型版本号	Ver.B

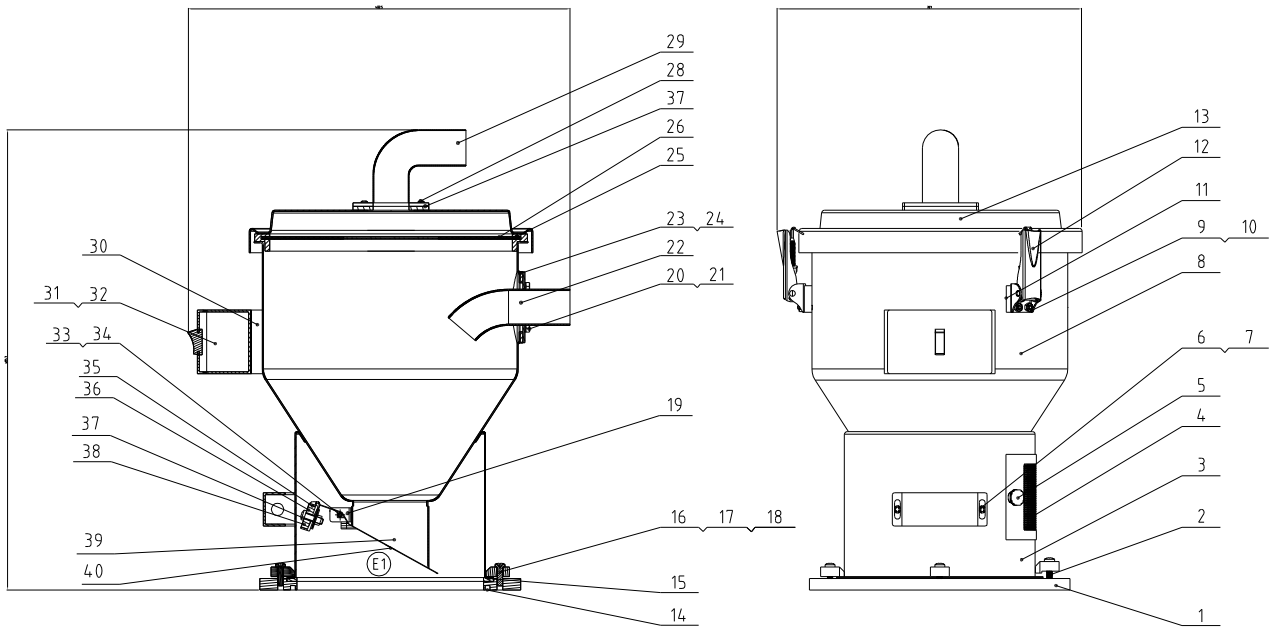

No.	Part No.	Name	Material	Num.	Remarks
40	BL21000602320	Mat. discharge plate	SUS201	1	
39	BL21001210220	Mat. discharge port	SUS201	1	
38	BH12000600010	Magnet sleeve	H58	1	
37	YW90257700000	Permanent magnet Φ25×Φ7×7	Permanent Magnet	1	
36	YW63062000000	Cross socket pan head screw GB/T-818 M6x20		1	
35	BL21000600120	Magnet cover	SUS201	1	
34	YW63034000000	Cross socket pan head screw GB/T-818 M3x40		1	
33	YW64000300000	Lock nut M3		1	
32	YW63040600000	Cross socket pan head screw GB/T-818 M4x6		2	
31	YR40010000200	Control box	ABS	1	
30		Control box base	SUS201	1	
29	BW20001500010	Air suction pipe	YL12	1	
28	YW62051500000	Large cross socket flat head screw M5×16		4	
27	YR10000000200	Air suction pipe fastener	Rubber	1	
26	BL21000600620	Filter screen	SUS201	1	
25	YR10000300100	Hopper fastener	Rubber	1	
24	YR10000600300	Inlet pipe fastener	Rubber	1	
23	BL20036000320	Inlet pipe fixed piece	SUS201	1	
22	BL32000600020	Inlet pipe	SUS201	1	
21	YW66040800000	Flat washer A grade GB/T97.1 4(4.5X9X0.8)		4	
20	YW64040700100	Non-metal insert hex. lock nut GB/T889.1 M4		4	
19	BL21000601120	Mat. discharge plate fixed base	SUS201	1	
18	YW66061300000	Flat washer A grade GB/T97.1 6-Longzine		8	
17	YW65006000000	Standard spring washer GB/T93 6-Longzine		8	
16	YW61062000300	Inner hex. column head screw GB/T 70.1 M6x20-Longzine		6	
15		Base fastener	EVA3.0	1	
14	YR20205500000	O-type seal ring inner dia. Φ200×5.5	Rubber	1	
13	BL21001200220	Hopper cover	SUS201	1	
12	YW02003000400	Adjustable snap hook SAL-6U-A-35	Assembly	3	
11	YR40000600800	Snap hook washer SAL-6U	ABS	3	
10	YW66040800000	Flat washer A grade GB/T97.1 4(4.5X9X0.8)-Longzine		10	
9	YW64040700100	Non-metal insert hex. lock nut GB/T889.1 M4		10	
8		Material storage hopper	SUS304	1	
7	YW63061000000	Cross socket pan head screw GB/T-818 M6x10 Longzine		2	
6	YR40000601100	Sensor shell	ABS	1	
5	YR40061500000	Star handle	Assembly	2	
4	YR40000601000	Vent window	ABS	1	
3	BL27000601320	Hopper fixed base	SUS304	1	
2	YW20000600500	Pressing block	YL112	4	
1	YW20006000000	Base	YL112	1	

Mark	Before modification	After modification	Modified by	Modify date	Drawer		Version	
					Designer		Approved by	
					Proofread by			
					Checked by		Date	

Title: SHR-12U Assembly Drawing

Drawing NO.: SHR-12U-A-ALL

Prop.: 1:5 | Num.: 1 | Material: Assembly | Surface | Material number

SHINI 信易電熱機械股份有限公司 Shini Plastics Technologies, Inc.

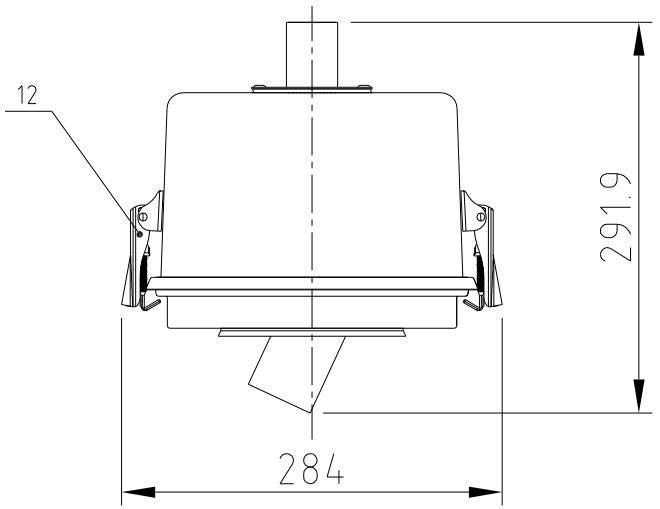

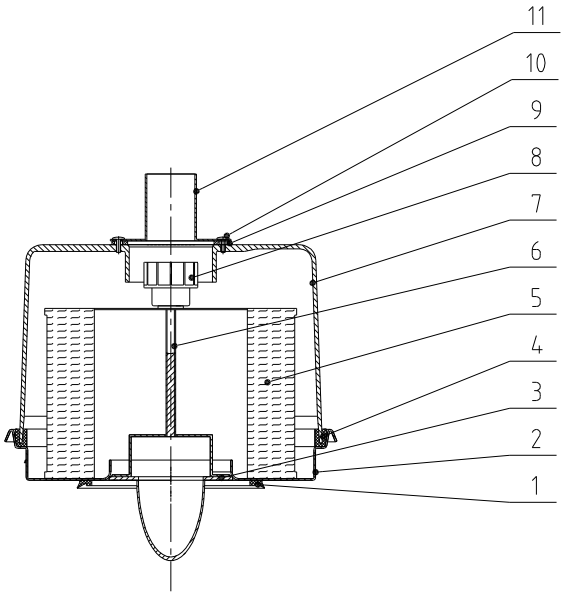

No.	Material number	Name	Mat.	Num.	Remarks
12	YW02003000400	Adjustable spring hook SAL-6U-A-35	Assembly	2	
11		Filter barrel suction flange	SUS201	1	
10	YW67041200600	Cross socket pan head self-tapping screw M4x12		4	
9	YR10243600000	Suction pipe round fastener SAL-24U/36U	Rubber	1	
8	YW09675100000	Small star nut 5/16 SHD-6～75KG-01-SJ	Alu. alloy	1	
7	YL22081000000	Transparent filter	PC	1	
6	BL20333640320	Filter barrel base	Assembly	1	
5	YR50708000100	Filter	Assembly	1	
4	YR10080000300	Filter barrel fastener	Rubber	1	
3	YR10243600000	Suction pipe round fastener SAL-24U/36U	Rubber	1	
2	BL20070000720	Filter barrel cover	SPCC1.5	1	
1	YR10080000000	Fastener	Rubber	1	

Mark	Before Mark	After Mod.	Modified by	Date				
					Draw.		Ver.	
					Desi.		App. by	
					Check			
					App.		Date	

Title: SAL-810G
Filter Barrel Assembly

Drawing no.: SAL-810G-A-ALL

Scale: 1:5 | Num.: 1 | Mat.: Assembly | Surface req. | Mat No.

SHINI 信易電熱機械股份有限公司
Shini Plastics Technologies, Inc.

机型版本号:Ver.C

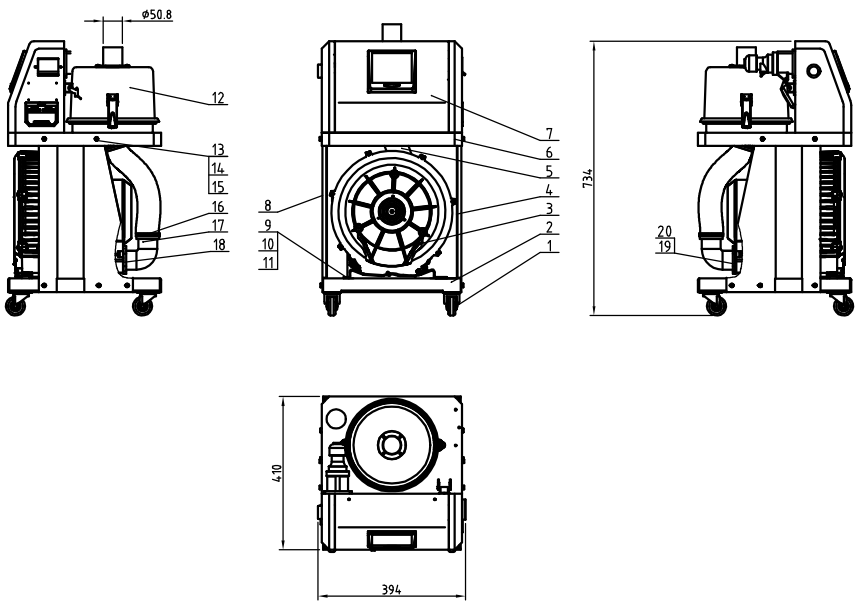

Tech. Req.:
1.Main parameters:
a.Througput:650kg/hr(Test mat. bulk density:0.65kg/L);
b.Power supply:3 phase,400VAc, 50Hz;
c.High pressure blower power:1.85kW;

序号	代号	名称	材质	数量	备注
20		Foot pipe pressing screen sheet	SPCC2.5	1	borrow
19		Foot pipe pressing screen	Q235	1	borrow
18	YR10002000000	Motor suction port tightener 2HP	rubber	1	
17		Air suction pipe elbow	ABS	1	borrow YR40020000000
16	YW02002500000	Pipe clamp ø57	Assembly	2	
15	YW65006000100	Standard spring washer GB/T93 6-Longzine		10	
14	YW66061300000	Flat gasket A grade GB/T97.1 6-Longzine		10	
13	YW60061500100	Hexagon screw bolt GB/T5783 M6x16-4.8-Longzine		10	
12		Filter assembly	Assembly	1	
11	YW65008000100	Standard spring washer GB/T93 8-Longzine		4	
10	YW66082200100	Large washer C grade GB/T96(8.4x24x2)-Longzine		4	
9	YW60081600100	Hexagon screw bolt GB/T5781 M8x16-4.8-Longzine		4	
8		Right side plate	SPCC2.0	1	borrow
7		Control box	Assembly	1	borrow
6		Fixed bracket	Assembly	1	borrow
5	YR60500700100	Steel wire ext. PUR hose 2"	PUR	0.35m	
4		Left side plate	SPCC2.0	1	borrow
3	BM30053000050	Shini blower RB-430 Small 3P/1.85KW	Assembly	1	
2		Base	SPCC2.0	1	borrow
1	YW03000200000	Black castor 2"	Assembly	4	

标记	更改前	更改后	更改人	日期					
					制图		版号	F	
					设计		核准		
					校对				
					审核		日期	20170331	

标题 SAL-830G 分离式真空填料机

图号 SAL-830G-ALL

比例 1:10 数量 1 材质 组件

表面要求

物料号

SHINI 信易電熱機械股份有限公司 Shini Plastics Technologies, Inc.

机型版本号	Ver.A

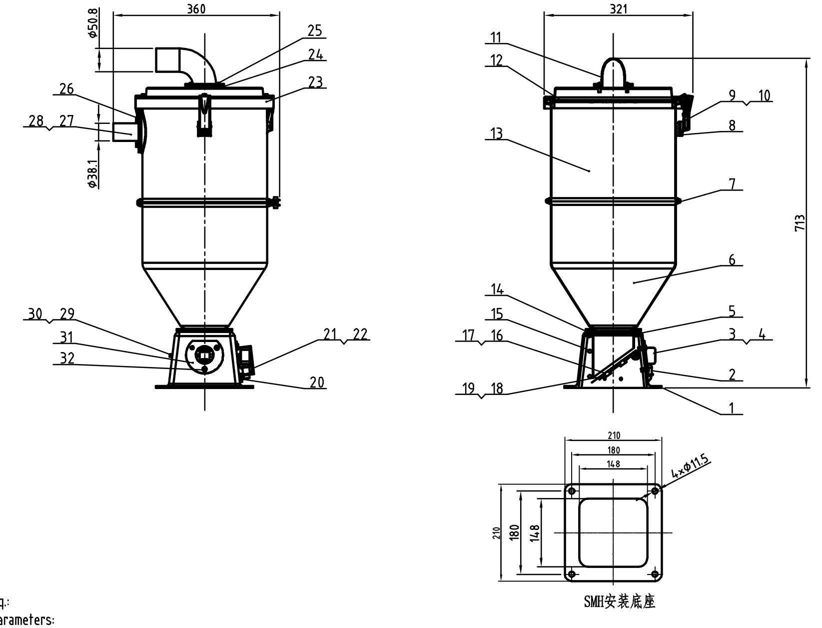

Tech. Req.:

1.Main parameters:

a. Storage hopper capacity: 24L;

2.Assembly Req.:

a. Adjust the opening of the discharge plate and the discharge port to be about 8mm;

序号	代号	名称	材质	数量	备注
32	YW62061000000	Cross socket flat head screw M6×10	4.8	7	
31	YR40002400100	Air suction pipe	Assembly	1	
30	YW66000300000	Open check ring 5	65Mn	2	
29		Iron rod	Q235A	1	BH10061400040 borrow
28		Inlet pipe	SUS201	1	BL27001208620 borrow
27		Inlet pipe fastener	Rubber	1	YR10243600000 borrow
26	YW66040800000	Flat washer 4	100HV	4	
25	YW62051500000	Cross socket pan head screw M5×16	4.8	4	
24	YR10000000200	Air suction pipe fastener	Rubber	1	
23		Hopper cover	SUS201	1	
22		Micro switch box	ABS	1	YR40330900000 borrow
21	YE14511200000	Micro switch LXW5-11G2	Assembly	1	
20	YW63041000000	Cross socket pan head screw M4×10	4.8	3	
19		Alu. accessories	YL112	1	BW20000100010 borrow
18		Mat. discharge plate rivet	Q235A	2	YW01033000000 borrow
17		Mat. discharge plate	SUS201	1	YW10000000100 borrow
16	YW01033000000	Spring	65Mn	2	
15		Silical hole	SUS304	1	BL20333600020 borrow
14	YW62052000000	Cross socket pan head screw M5×20	4.8	3	
13		Large hopper	SUS201	1	
12		Filter screen	Assembly	1	YR10000601000 borrow
11		Air suction pipe	SUS201	1	BW20002000010 borrow
10		Snap hook	Assembly	3	YW02003000400 borrow
9	YR40000600800	Snap hook washer	ABS	3	
8	YW64040700100	Lock nut M4×0.7	04	10	
7		Pipe clamp	Assembly	1	BL21001208120 borrow
6		Material storage tank	Assembly	1	
5	YR10000000600	Base fastener	Rubber	2	
4	YW68005500000	Set screw M5×5	4.8	4	
3		With heavy-hammer	Alloy	1	YW20602100000 borrow
2		Pin lift mechanism	Assembly	1	BH10000600050 borrow
1		Square base (thin type)	YL112	1	BA10040000210 borrow

					制图		版号	C	标题 SMH-24L 真空料斗	图号 SMH-24L-50A-38M-A-ALL
					设计		核准			
					校对				SHINI 信易電熱機械股份有限公司 Shini Plastics Technologies, Inc.	
标记	更改前	更改后	更改人	日期	审核		日期	20131206		

比例	1:8	数量	1
		材质	组件
表面要求			
物料号			

机型版本号	Ver.B

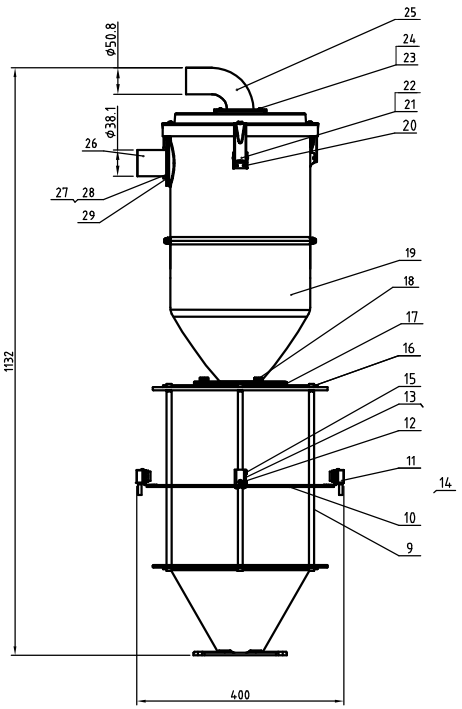

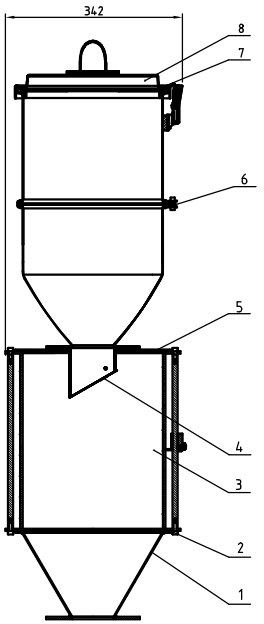

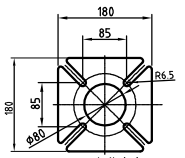

SVH安装底座

序号	代号	名称	材质	数量	备注
29	YW64040700100	Non-metal insert hexagon nut GB/T889.1M4		4	
28		Material inlet pipe fixed plate	SUS201	1	BL27002401720 borrow
27		Feed pipe tighten	Rubber	1	YR10243600000 borrow
26		Material inlet pipe	Assembly	1	borrow BL27001208620
25		Air suction pipe	SUS201	1	borrow BL27002400620
24		Air suction pipe tighten	Rubber	1	YR10002500000 borrow
23	YW62051500000	Large cross socket flat head screw JS1111 M5x16 Longzhe		4	
22	YR4000600800	Snap hook pressure block SAL-6U	ABS	3	
21	YW02003000400	Snap hook SAL-6U-A-35	Assembly	3	
20	YW64040700100	Non-metal inserted hexagon lock nut GB/T889.1M4		10	
19		Storage hopper	SUS304	1	
18	YW61061601200	Inner hexagon cylinder screw GB/T 70.1M6x16 Longzhe		3	
17		Ventilation flange	SUS201	1	BL90052003210 borrow
16	YW61061601200	Inner hexagon cylinder screwGB/T 70.1M6x16 Longzhe		12	
15	YW68004500000	Inner hexagon flat-end set screw GB/T77M4x5Longzhe		2	
14		Photosensor pressing block	SUS201	1	YW31616200000 borrow
13		Photosensor fixed base	YL112	1	BL90001000120 borrow
12	YW63041200100	Cross recessed pan head screw GB/T818M4×12Longzhe		3	
11	YE15143900000	Photosensor FOTEK T18-3MN-PE	Assembly	1 pair	
10		Photosensor fixed piece	SUS201	1	
9		Flange connecting rod	Q235	6	BH10103300010
8		Hopper cover	SUS201	1	BL21002402120 borrow
7		Filter screen	Assembly	1	borrow
6		Hopper fastener	Assembly	1	BL21001208120 borrow
5		Glass pipe upper flange	SUS201	1	
4		Non-return piece	SUS201	1	BL21001200520 borrow
3		Glass pipe φ280×φ270×340	glass	1	YW70282700000
2		Glass pipe fastener	silica gel	4	YR10001200100 borrow
1		Glass pipe lower flange	SUS201	1	

标记	更改前	更改后	更改人	日期				
					制图		版号	1
					设计		核准	
					校对			
					审核		日期	20140506

标题 SVH-24L 装配图

图号 SVH-24L-50A-38M-A-ALL

比例 1:7 数量 1 材质 组合件

表面要求

物料号

SHINI 信易電熱機械股份有限公司 Shini Plastics Technologies, Inc.

机型版本号:Ver.B

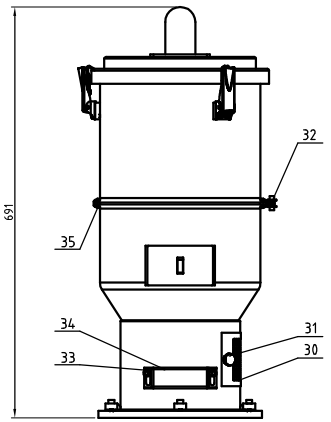

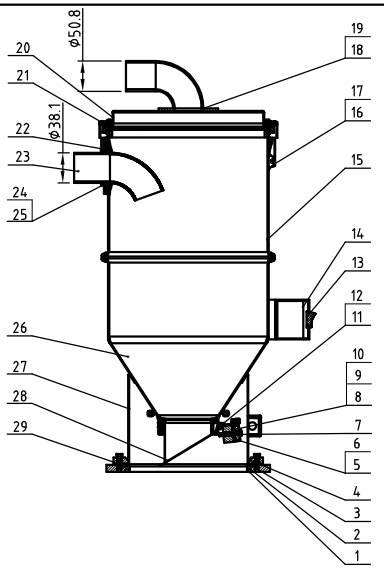

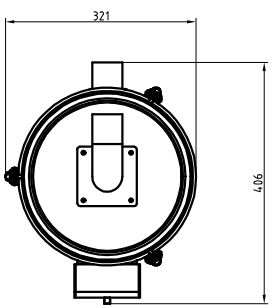

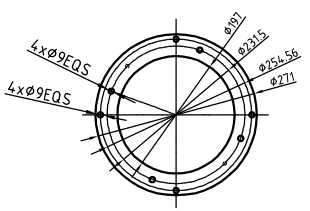

SHR-6U~24U mount base

序号	代号	名称	材质	数量	备注
35	YR10241300100	Large hopper fastener SHR-24U-A-13 (white silica gel(has mould)	white silica gel	1	
34		Sensor shell	ABS	1	borrow
33	YW61061601200	Inner hex. column head screw GB/T 70.1 M6x16-12.9-Longzine		2	
32		Pipe clamp	Assembly	1	borrow
31	YR40061500000	Star handle SAL-6U/M6×15	Assembly	2	
30	YR40000601000	Vent window	Assembly	1	borrow
29	YW61062000300	Inner hex. column head screw GB/T 70.1 M6x20-12.9-Longzine		4	
28		Mat. discharge plate	SUS201	1	
27		Hopper fixed base	SUS304	1	borrow
26		Material storage hopper	SUS304	1	
25	YW64040700100	Non-metal insert hex. lock nut GB/T889.1 M4		4	
24	YW66041000000	Flat washer A grade GB/T97.1 4/4.5X9X0.8/-Longzine		4	
23	BL27001208620	Inlet pipe	Assembly	1	borrow
22		Inlet pipe fastener	Rubber	1	
21		Filter screen	Assembly	1	borrow
20		Hopper cover	SUS304	1	
19		Air suction pipe	SUS201	1	
18		Inlet pipe fastener	Rubber	1	
17	YW02003000400	Snap hook SAL-6U-A-35	Assembly	3	
16	YR40000600800	Snap hook washer SAL-6U	ABS	3	
15		Large hopper	SUS201	1	
14	BH90615000010	Water-proof connection box WDJH-100	ABS	1	
13	YE10210400000	White alternative switch R210-C5LBW4P	Assembly	1	
12	YW64000300000	Non-metal insert hex. lock nut GB/T889.1 M3		1	
11	YW63034000000	Cross socket pan head screw GB/T-818 M3x40- Longzine		1	
10		With weight	HPb59-1	1	
9	YW64000600200	Non-metal insert hex. lock nut GB/T889.1 M6		1	
8		Magnet sleeve	HPb59-1	1	borrow
7	YW63063500000	Cross socket pan head screw GB/T-818 M6x35- Longzine		1	
6		Magnet cover	SUS201	1	borrow
5	YW90257700000	Permanent magnet Ø25×Ø7×7	permanent magnet	1	
4		Pressing block	YL112	4	borrow
3		Base fastener	EVA2.0	1	borrow
2		Base	YL112	1	borrow
1	YR20205500000	O-type seal ring inner dia. Ø200×5.5	Rubber	1	

Tech. Req.:
1.Main parameters:
a. Storage hopper capacity: 24L;

标记	更改前	更改后	更改人	日期	审核		日期	20101008
					校对			
					设计		核准	
					制图		版号	G

标题 SHR-24U 欧化真空料斗

图号 SHR-24U-50A-38M-ALL

比例 1:6 数量 1

材质

表面要求

物料号

SHINI 信昌電熱機械股份有限公司 Shini Plastics Technologies, Inc.

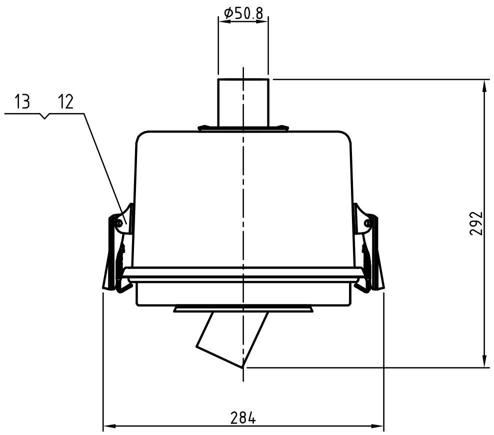

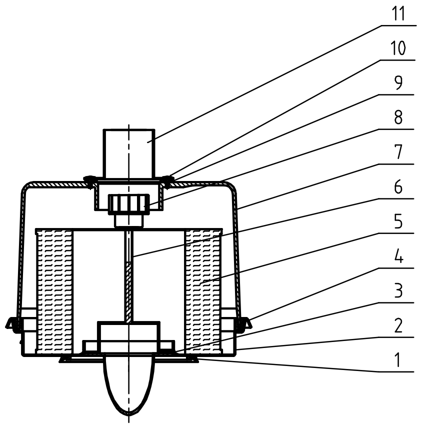

序号	代号	名称	材质	数量	备注
13	YW69041200900	Open type flat round head blind rivets	SUS201	4	
12	YW02003000400	Adjustable spring hook SAL-6U-A-35	Assembly	2	
11		Filter barrel suction port	SUS201	1	2" suction port
10	YW67041600700	Cross socket pan head self-tapping screw		4	
9	YR10243600000	Suction pipe round fastener SAL-24U/36U	Rubber	1	
8	YW09675100000	Small star nut 5/16 SHD-6~75KG-01-SJ	Alu. alloy	1	
7		Transparent filter	PC	1	YL22081000100 borrow
6		Filter barrel base	Assembly	1	BL20333640320borrow
5	YR50708000100	Filter	Assembly	1	
4		Filter barrel fastener	Nitrile rubber (white)	1	YR10080000300borrow
3	YR10243600000	Suction pipe round fastener SAL-24U/36U	Rubber	1	
2		Filter barrel cover	SPCC1.5	1	BL20070000720borrow
1		Fastener	Rubber	1	YR10080000000borrow

					制图		版号	C	标题 SAL-830G 过滤器组合
					设计		核准		
					校对				
标记	更改前	更改后	更改人	日期	审核		日期	20170331	

图号 SAL-830G-A-ALL	比例 1:5	数量	1
		材质	组件
信易電熱機械股份有限公司 Shini Plastics Technologies, Inc.	表面要求		
	物料号		