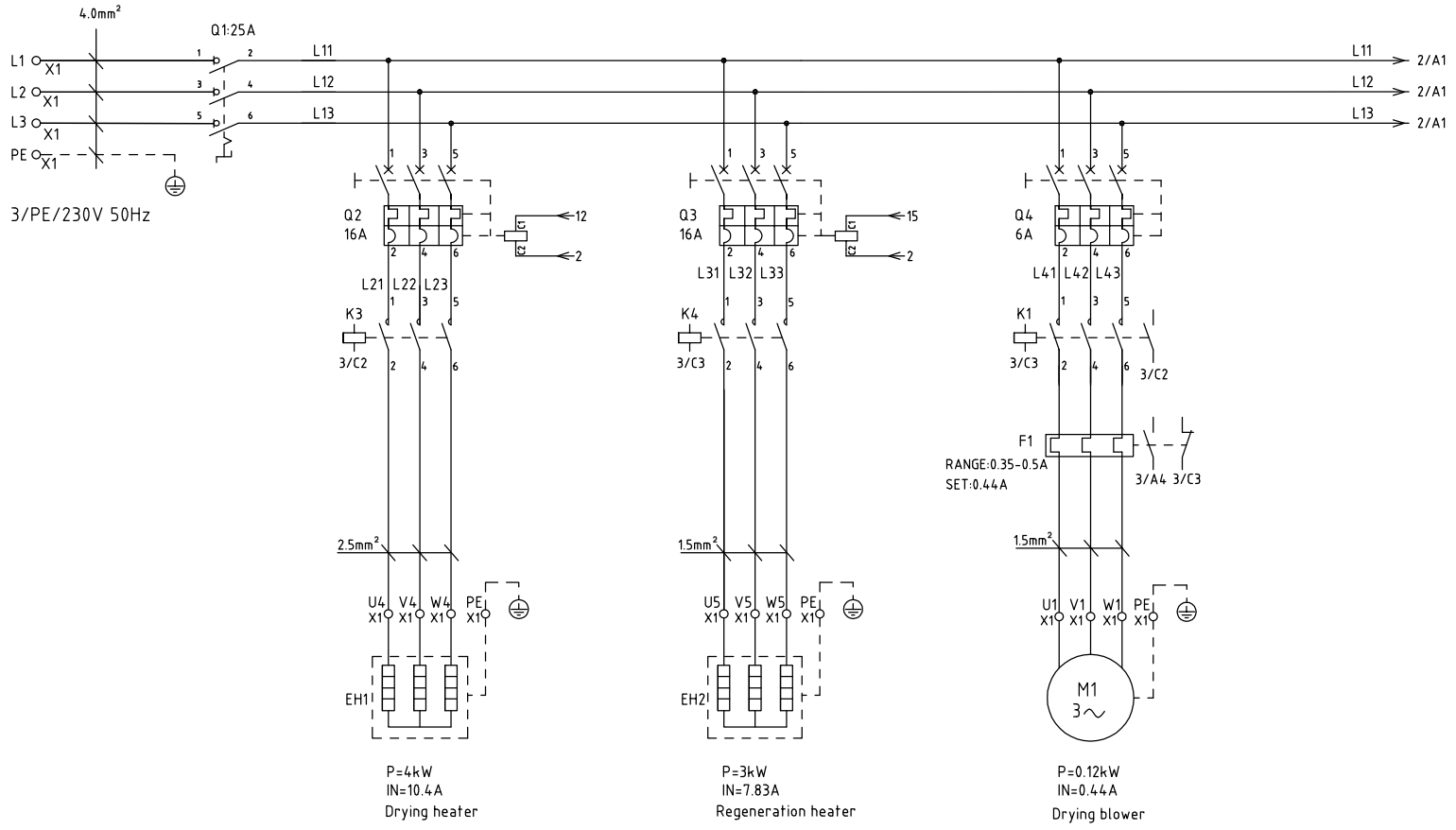

整机版本Ver.E

					Drawer		Version	H	Title: SDD-40U(80U)/40H Main Circuit Diagram 1	Drawing NO. SDD-40U(80U)/40H-CE-230V-H-1	Scale	Page 1
					Designer		Approved by				Standard CE	Totally 6 Pages
					Proofread by				信易電熱機械股份有限公司 Shini Plastics Technologies, Inc.		Voltage	230V
Mark	Before modification	After modification	Modified by	Modify date	Checked by		Date	20171023			Frequency	50Hz

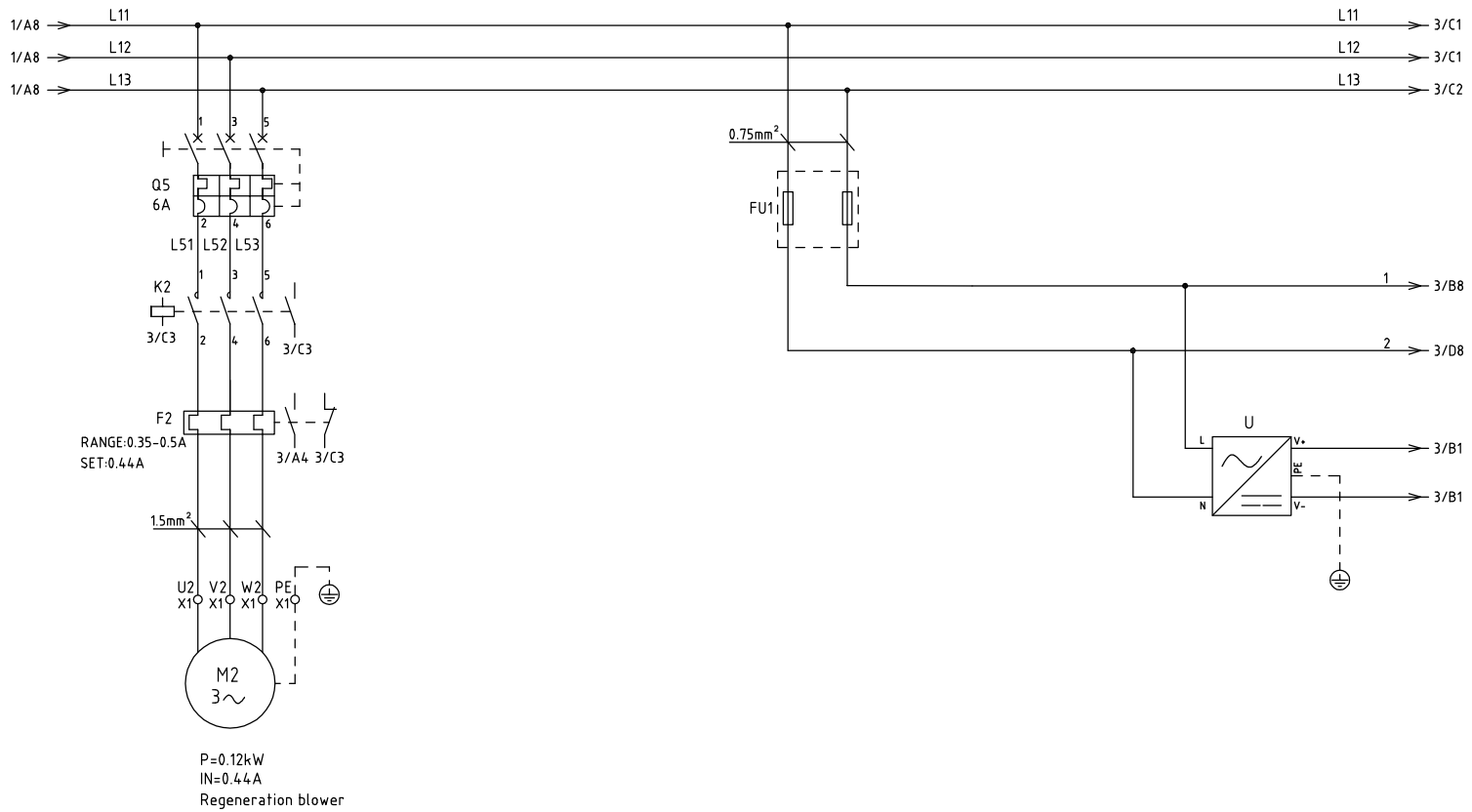

整机版本Ver.E

					Drawer		Version	H	Title: SDD-40U(80U)/40H Main Circuit Diagram 2	Drawing NO. SDD-40U(80U)/40H-CE-230V-H-2	Scale		Page 2
					Designer		Approved by				Standard	CE	Totally 6 Pages
					Proofread by				信易電熱機械股份有限公司 Shini Plastics Technologies, Inc.		Voltage	230V	
Mark	Before modification	After modification	Modified by	Modify date	Checked by		Date	20171023			Frequency	50Hz	

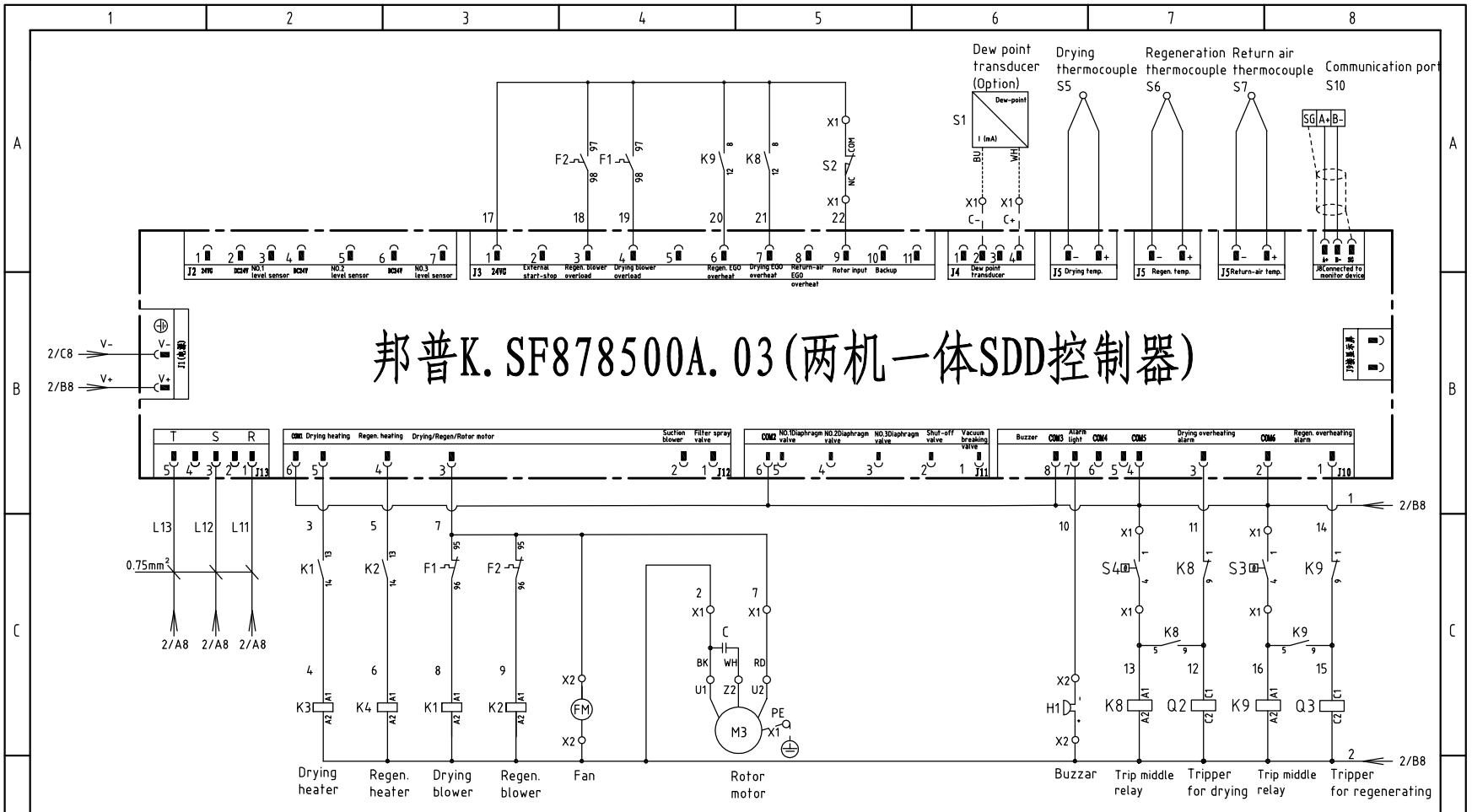

整机版本Ver.E

					Drawer		Version	H	Title: SDD-40U(80U)/40H Control Circuit Diagram	Drawing NO. SDD-40U(80U)/40H-CE-230V-H-3	Scale	Page 3
					Designer		Approved by				Standard CE	Totally 6 Pages
					Proofread by				信易電熱機械股份有限公司 Shini Plastics Technologies, Inc.		Voltage	230V
Mark	Before modification	After modification	Modified by	Modify date	Checked by		Date	20171023			Frequency	50Hz

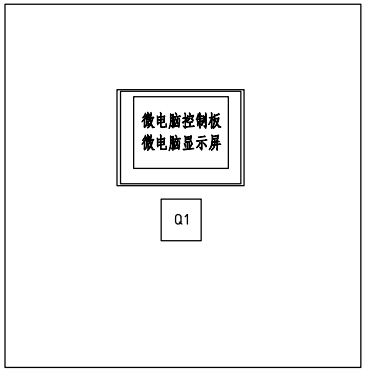

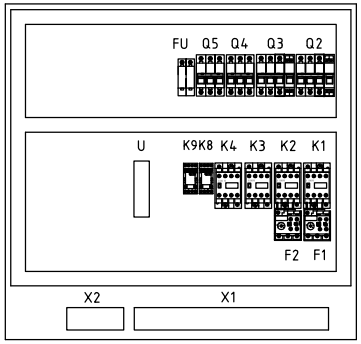

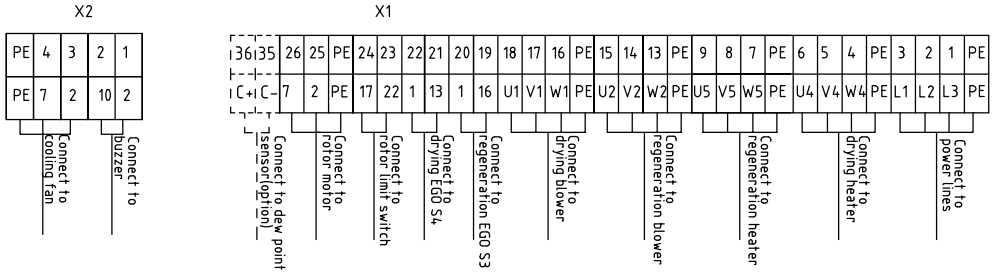

整机版本Ver.E

					Drawer		Version	H	Title SDD-40U(80U)/40H Electrical Components Layout	Drawing NO. SDD-40U(80U)/40H-CE-230V-H-4	Scale		Page 4
					Designer		Approved by				Standard	CE	Totally 6 Pages
					Proofread by				信易電熱機械股份有限公司 Shini Plastics Technologies, Inc.		Voltage	230V	
Mark	Before modification	After modification	Modified by	Modify date	Checked by		Date	20171023			Frequency	50Hz	

NO.	Symbol	Name	Manufacturer	Type	Specification	Number	Material number	Remark
1	Q1	Main switch	EATON	P1-25/EA/SVB	25A	1	YE10125250000	
2	Q2 Q3	Circuit-breaker	TECO	BM-63C/3016S	16A	2	YE40301603000	
3		Excitation release	TECO	MX	220V 50/60Hz	2	YE40023560000	
4	Q4 Q5	Circuit-breaker	TECO	BM-63C/3006S	6A	2	YE40300603000	
5	K1	Contactor	SIEMENS	3RT6015-1AN21	7A 1NO 220V 50/60Hz	1	YE00601521000	
6	K2	Contactor	SIEMENS	3RT6015-1AN21	7A 1NO 220V 50/60Hz	1	YE00601521000	
7	K3	Contactor	SIEMENS	3RT6018-1AN21	16A 1NO 220V 50/60Hz	1	YE00601800000	
8	K4	Contactor	SIEMENS	3RT6018-1AN21	16A 1NO 220V 50/60Hz	1	YE00601800000	
9	K8 K9	Relay	WEIDMULLER	DRM270730LT	220V 50/60Hz	2	YE03270700000	
10	F1	Overload relay	SIEMENS	3RU6116-0FB0	0.35-0.5A	1	YE01161350000	
11	F2	Overload relay	SIEMENS	3RU6116-0FB0	0.35-0.5A	1	YE01161350000	
12	PCB	Controller	PUMP	K.SF878500A.03	230V 50/60Hz	1	YE80878500100	
13	U	DC power	MEAN WELL	ESA-35-24	OUT=DC24V 1.5A	1	YE71352400100	
14	FU1	Fuse base	CHINT	RT28-32	2P/32A/500V/10×38	1	YE41032200000	
15		Fuse	CHINT	10×38 500V	2A	2	YE46002000100	
16	H1	Buzzer	HITPOINT	PK-35A	220V AC/DC	1	YE84003500200	
17	S1	Dew-point transducer	CS	CS 217-OEM	POWER=24VDC OUT=4-20mA	1	YE90021700100	(1)(2)
18	S2	Position limit switch	TEND	YBLXW-5/11G2	250V 5(4)A	1	----	(1)
19	S3 S4	Temperature protector	---	組合體EGO	115-320℃ 55.13262.160	2	----	(1)
20	S5 S6	Thermocouple	SHINI	---------	--------	2	----	(1)
21	X1	Terminal board	HOLLEYWELL	4mm²	-	15	YE60000403200	
22		Terminal board	HOLLEYWELL	4mm²PE	-	5	YE60000403500	
23		Terminal board	HOLLEYWELL	2.5mm²	-	8	YE60002503200	
24		Terminal board	HOLLEYWELL	2.5mm²PE	-	1	YE60002503400	
25		Terminal board	HOLLEYWELL	2.5mm²	-	2	YE60002503200	(2)

整机版本Ver.E Notes: (1)Means it's not the material inside the control box. (2)Stands for optional dew-point monitor

Mark	Before modification	After modification	Modified by	Modify date

Drawer		Version	H
Designer		Approved by	
Proofread by			
Checked by		Date	20171023

Title: SDD-40U(80U)/40H
Electrical Components List 1

Drawing NO.: SDD-40U(80U)/40H-CE-230V-H-5

信易電熱機械股份有限公司
Shini Plastics Technologies, Inc.

Scale		Page	5
Standard	CE	Totally	6 Pages
Voltage	230V		
Frequency	50Hz		

NO.	Symbol	Name	Manufacturer	Type	Specification	Number	Material number	Remark
26	X2	Terminal board	HOLLEYWELL	2.5mm²	-	4	YE60002503200	
27		Terminal board	HOLLEYWELL	2.5mm²PE	-	1	YE60002503400	
28	FM	Fan	----	12×12CM	230V/50/60HZ 40W	1	-----	(1)
29	M1	Blower 4"	SHINI	-----	0.12kW 200-240V 50/60HZ	1	-----	(1)
30	M2	Blower 2.5"	SHINI	-----	0.12kW 200-240V 50/60HZ	1	-----	(1)
31	M3	Motor	東歷	3IK15GN-C-T/3GN-10XK/3GN-120K 220V 0.015kW		1	-----	(1)
32	EH1	Pipe heater	SHINI	-----	4kW 230V	1	-----	(1)
33	EH2	Pipe heater	SHINI	-----	3kW 230V	1	-----	(1)
34		Terminal block E/GKseries(honeywell)	-----	-----	-----	4	YE60000003900	

整机版本Ver.E Notes: (1)Means it's not the material inside the control box. (2)Stands for optional dew-point monitor

Mark	Before modification	After modification	Modified by	Modify date	Drawer		Version	H
					Designer		Approved by	
					Proofread by			
					Checked by		Date	20171023

Title: SDD-40U(80U)/40H
Electrical Components List 2

Drawing NO.: SDD-40U(80U)/40H-CE-230V-H-6

SHINI 信易電熱機械股份有限公司 Shini Plastics Technologies, Inc.

Scale	
Standard	CE
Page	6
Totally	6 Pages
Voltage	230V
Frequency	50Hz

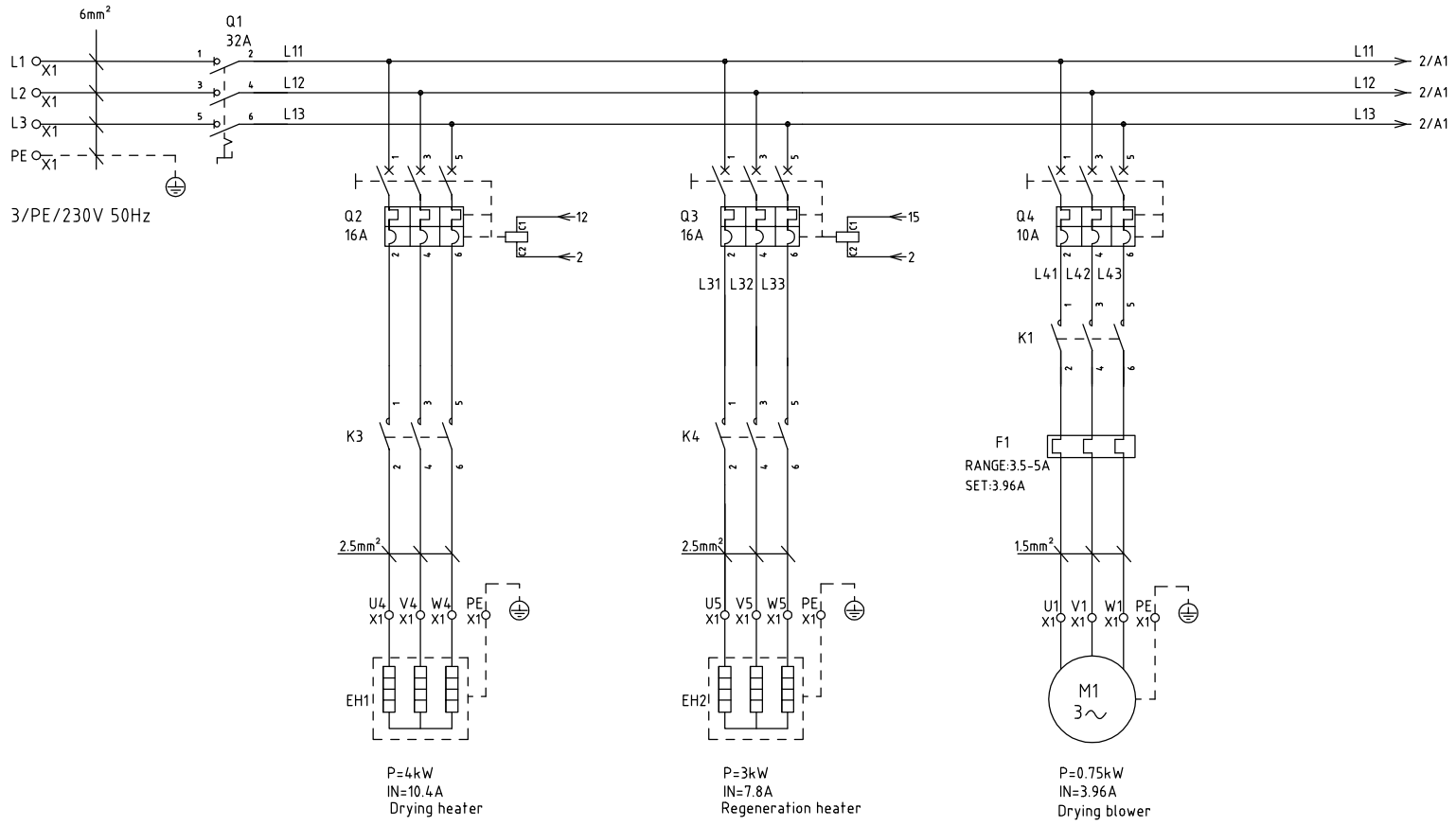

整机版本Ver.D

					Drawer		Version	G	Title SDD-120U(160U)/80H Main Circuit Diagram 1	Drawing NO. SDD-120U(160U)/80H-CE-230V-G-1	Scale	Page 1
					Designer		Approved by				Standard CE	Totally 6 Pages
					Proofread by				信易電熱機械股份有限公司 Shini Plastics Technologies, Inc.		Voltage	230V
Mark	Before modification	After modification	Modified by	Modify date	Checked by		Date	20180830			Frequency	50Hz

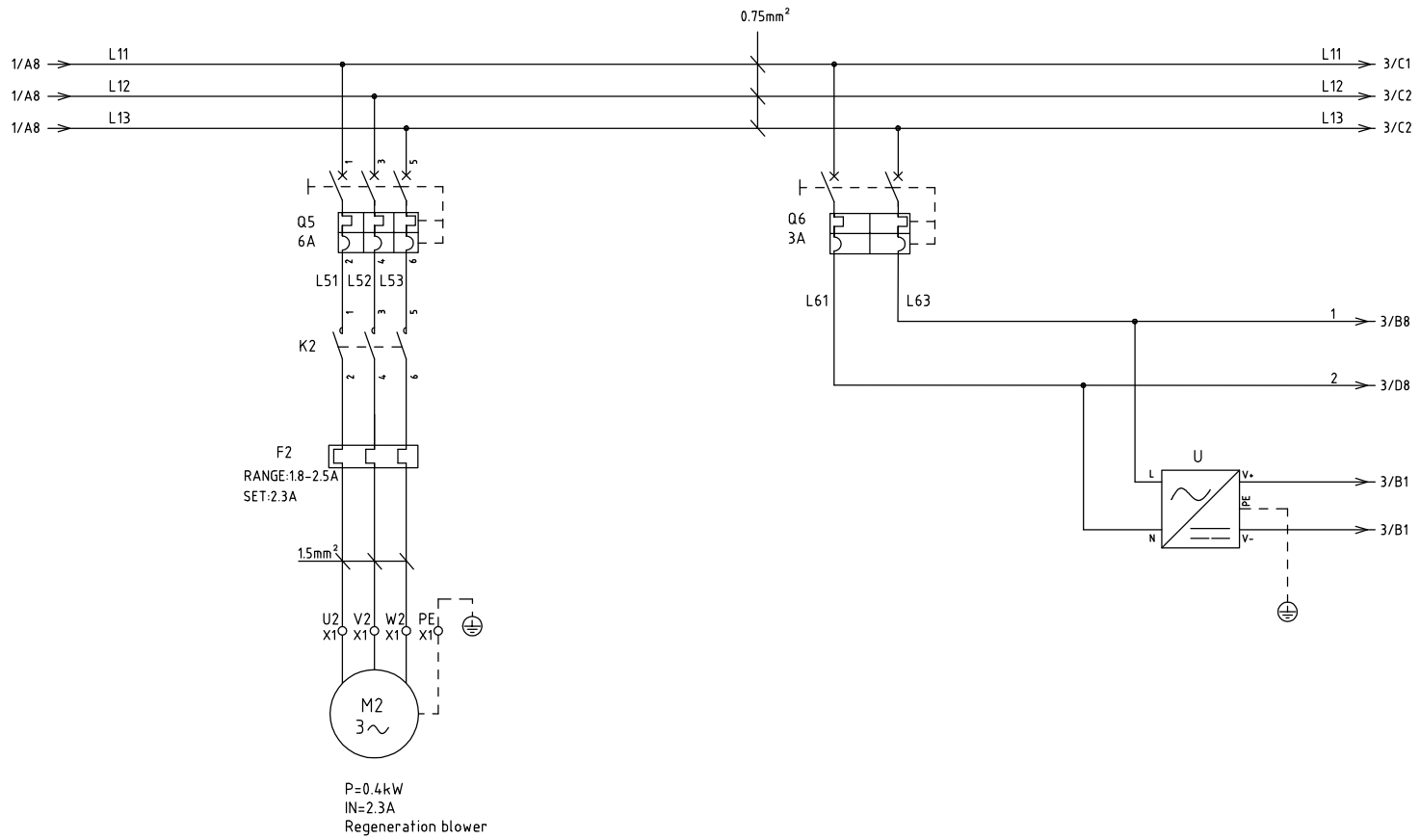

整机版本Ver.D

					Drawer		Version	G	Title SDD-120U(160U)/80H Main Circuit Diagram 2	Drawing NO. SDD-120U(160U)/80H-CE-230V-G-2	Scale		Page 2
					Designer		Approved by				Standard	CE	Totally 6 Pages
					Proofread by				SHINI 信易電熱機械股份有限公司 Shini Plastics Technologies, Inc.		Voltage	230V	
Mark	Before modification	After modification	Modified by	Modify date	Checked by		Date	20180830			Frequency	50Hz	

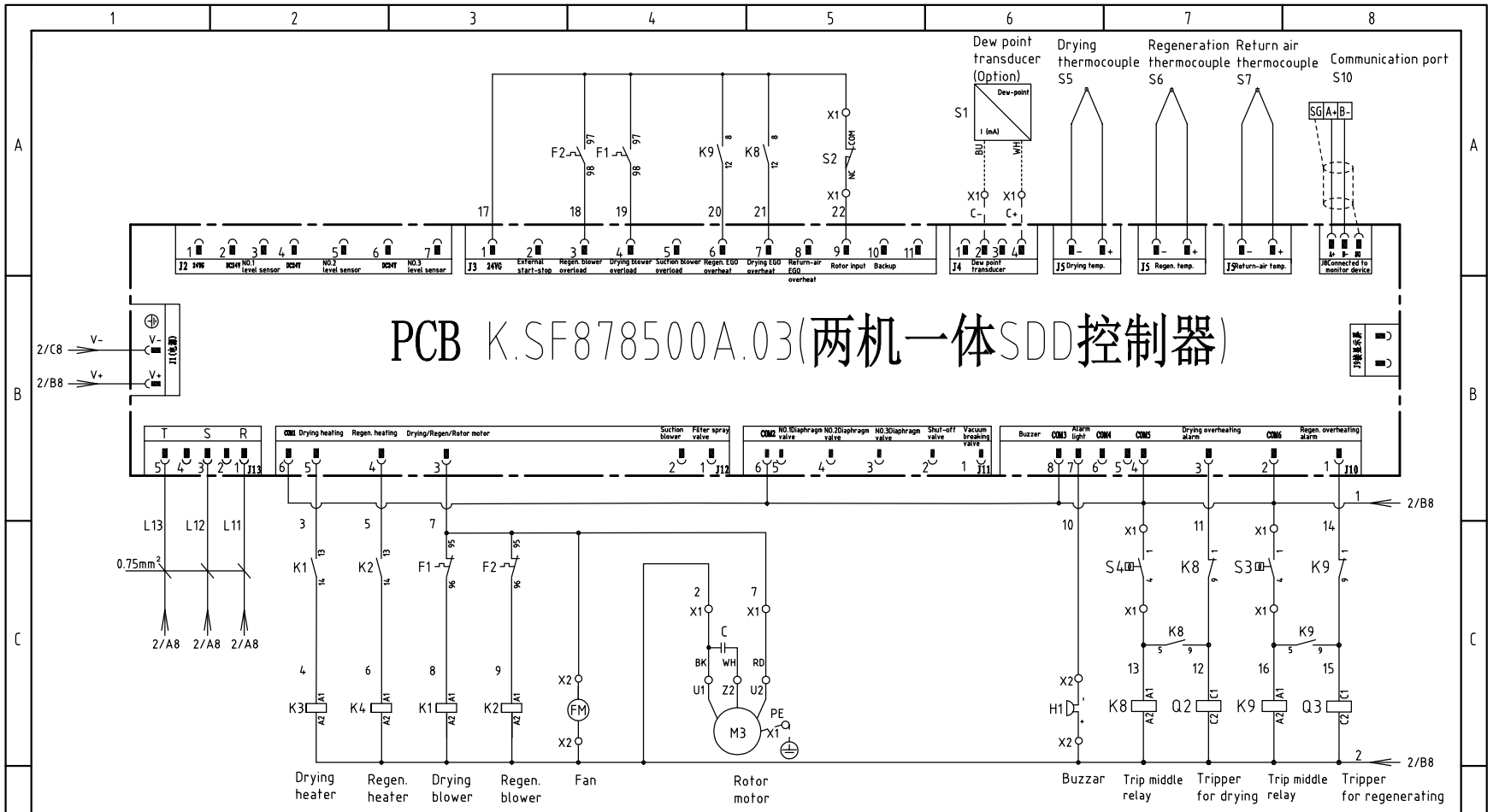

整机版本Ver.D

					Drawer		Version	G	Title SDD-120U(160U)/80H Control Circuit Diagram	Drawing NO. SDD-120U(160U)/80H-CE-230V-G-3	Scale		Page 3
					Designer		Approved by				Standard	CE	Totally 6 Pages
					Proofread by				SHINI 信易電熱機械股份有限公司 Shini Plastics Technologies, Inc.		Voltage	230V	
Mark	Before modification	After modification	Modified by	Modify date	Checked by		Date	20180830			Frequency	50Hz	

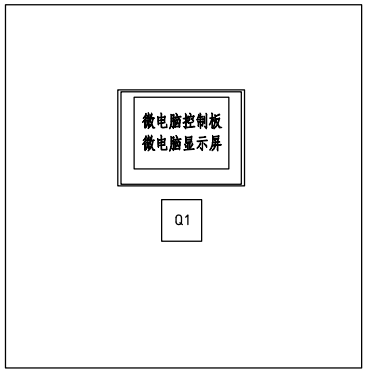

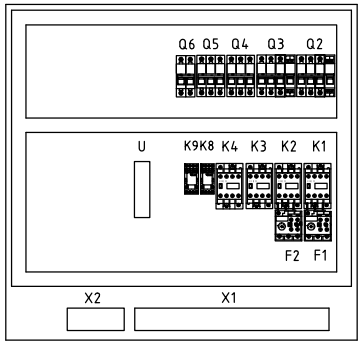

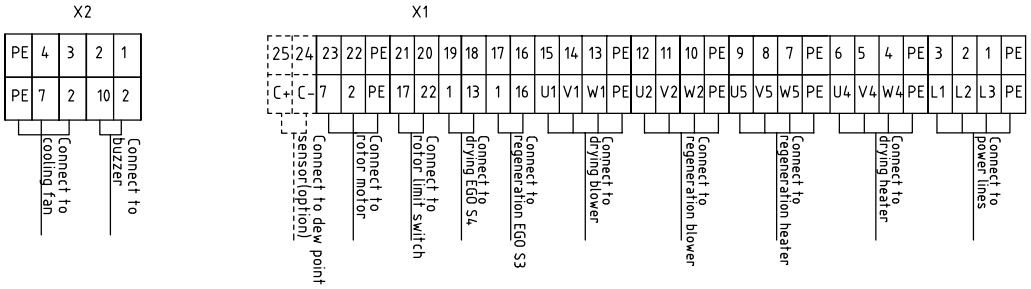

整机版本Ver.D

					Drawer		Version	G	Title SDD-120U(160U)/80H Electrical Components Layout	Drawing NO. SDD-120U(160U)/80H-CE-230V-G-4	Scale		Page 4
					Designer		Approved by				Standard	CE	Totally 6 Pages
					Proofread by				信易電熱機械股份有限公司 Shini Plastics Technologies, Inc.		Voltage	230V	
Mark	Before modification	After modification	Modified by	Modify date	Checked by		Date	20180830			Frequency	50Hz	

NO.	Symbol	Name	Manufacturer	Type	Specification	Number	Material number	Remark
1	Q1	Main power switch	EATON	P1-32/EA/SVB	32A	1	YE10132320000	
2	Q2	Circuit-breaker	TECO	BM-63C 3P	16A	1	YE40301603000	
3	Q3	Circuit-breaker	TECO	BM-63C 3P	16A	1	YE40301603000	
4		Excitation release	TECO	MX	220V 50/60Hz	2	YE40023560000	
5	Q4	Circuit-breaker	TECO	BM-63C 3P	10A	1	YE40301003000	
6	Q5	Circuit-breaker	TECO	BM-63C 3P	6A	1	YE40300603000	
7	Q7	Circuit-breaker	TECO	BM-63C 2P	3A	1	YE40200203000	
8	K1 K2	Contactor	SIEMENS	3RT6016-1AN21	220V 50/60Hz	2	YE00601621000	
9	K3	Contactor	SIEMENS	3RT6018-1AB01	220V 50/60Hz	1	YE00601802500	
10	K4	Contactor	SIEMENS	3RT6018-1AB01	220V 50/60Hz	1	YE00601802500	
11	K8 K9	Middle relay	WEIDMULLER	DRM270730LT	220V 50/60Hz	2	YE03270700000	
12	F1	Thermo overload relay	SIEMENS	3RU6116-1FB0	3.5-5A	1	YE01160350000	
13	F2	Thermo overload relay	SIEMENS	3RU6116-1DB0	1.8-2.5A	1	YE01160180000	
14	PCB	Microcomputer control panel +Microcomputer screen	PUMP	K.SF878500A.03	24VDC	1	YE80878500100	
15	U	DC power	MEAN WELL	NES-35-24	OUT=DC24V 1.5A	1	YE71352400100	
16	H1	Buzzer	SHINI	PK-35A	220V 50/60Hz	1	YE84003500200	(1)
17	S1	Dew-point transducer	CS	CS 217-OEM	POWER=24VDC OUT=4-20mA	1	YE90021700100	(1) (2)
18	S2	Micro switch	TEND	----	250V 5(4)A	1	----	(1)
19	S3 S4	Temperature protector	EGO	WR-A-50-300-2500-3	250V 5(4)A	2	----	(1)
20	S5 S6 S7	Thermocouple	SHINI	ST-K	K	3	----	(1)
21	X1 X2	Terminal board	HONEYWELL	$6mm^2$		3	YE60000603200	
22		Terminal board	HONEYWELL	$6mm^2$PE		1	YE60000603500	
23		Terminal board	HONEYWELL	$4mm^2$		15	YE60000403200	
24		Terminal board	HONEYWELL	$4mm^2$PE		5	YE60000403500	
25		Terminal board	HONEYWELL	$2.5mm^2$	-	12	YE60002503200	

整机版本Ver.D

Notes: (1)Means it's not the material inside the control box. (2)Stands for optional dew-point monitor

Mark	Before modification	After modification	Modified by	Modify date

Drawer		Version	G
Designer		Approved by	
Proofread by			
Checked by		Date	20180830

Title: SDD-120U(160U)/80H
Electrical Components List 1

Drawing NO.: SDD-120U(160U)/80H-CE-230V-G-5

Scale: /
Standard: CE
Page 5
Totally 6 Pages
Voltage: 230V
Frequency: 50Hz

信易電熱機械股份有限公司
Shini Plastics Technologies, Inc.

NO.	Symbol	Name	Manufacturer	Type	Specification	Number	Material number	Remark
26		Terminal board	HONEYWELL	2.5mm²PE	-	1	YE60002503400	
27		Terminal board	HONEYWELL	2.5mm²	32A 690V	2	YE60002503200	(2)
28	FM	Fan	SUNON	DP-200A	230VAC	1	YM60121200400	(1)
29	M1	Blower	SHINI	-----	230V 0.75kW	1	-----	(1)
30	M2	Blower	SHINI	-----	230V 0.2kW	1	-----	(1)
31	M3	Motor	----	-----	230V 0.015kW	1	-----	(1)
32	EH1	Heater	SHINI	-----	230V 4kW	1	-----	(1)
33	EH2	Heater	SHINI	-----	230V 3kW	1	-----	(1)
34	S10	Communication interface board RS-485 (double Dsub-9pin connector)					YE90048501200	(1)
35		Shell RS485(SAL-700G-A-19)0					YR40048500000	(1)

整机版本Ver.D

Notes: (1)Means it's not the material inside the control box. (2)Stands for optional dew-point monitor

Mark	Before modification	After modification	Modified by	Modify date

Drawer		Version	G	Title	SDD-120U(160U)/80H Electrical Components List 2
Designer		Approved by		Drawing NO.	SDD-120U(160U)/80H-CE-230V-G-6
Proofread by				Scale	/
Checked by		Date	20180830	Standard	CE
				Page	6
				Totally	6 Pages
				Voltage	230V
				Frequency	50Hz

信易電熱機械股份有限公司
Shini Plastics Technologies, Inc.

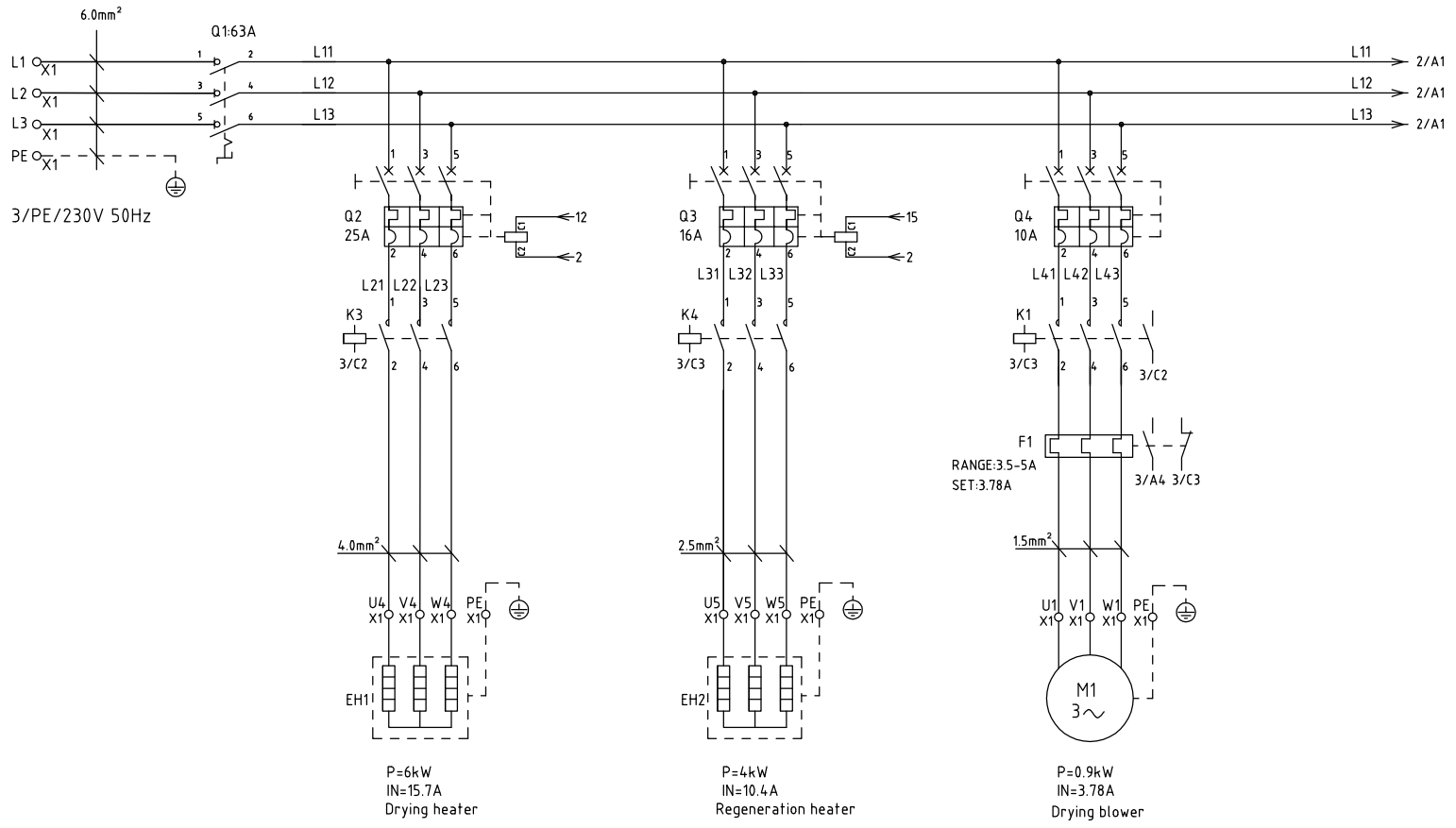

整机版本Ver.D

					Drawer		Version	F	Title: SDD-160U(230)/120H	Drawing NO.	Scale	Page 1
					Designer		Approved by		Main Circuit Diagram 1	SDD-160U(230U)/120H-CE-230V-F-1	Standard CE	Totally 6 Pages
					Proofread by				SHINI 信易電熱機械股份有限公司 Shini Plastics Technologies, Inc.		Voltage	230V
Mark	Before modification	After modification	Modified by	Modify date	Checked by		Date	20171023			Frequency	50Hz

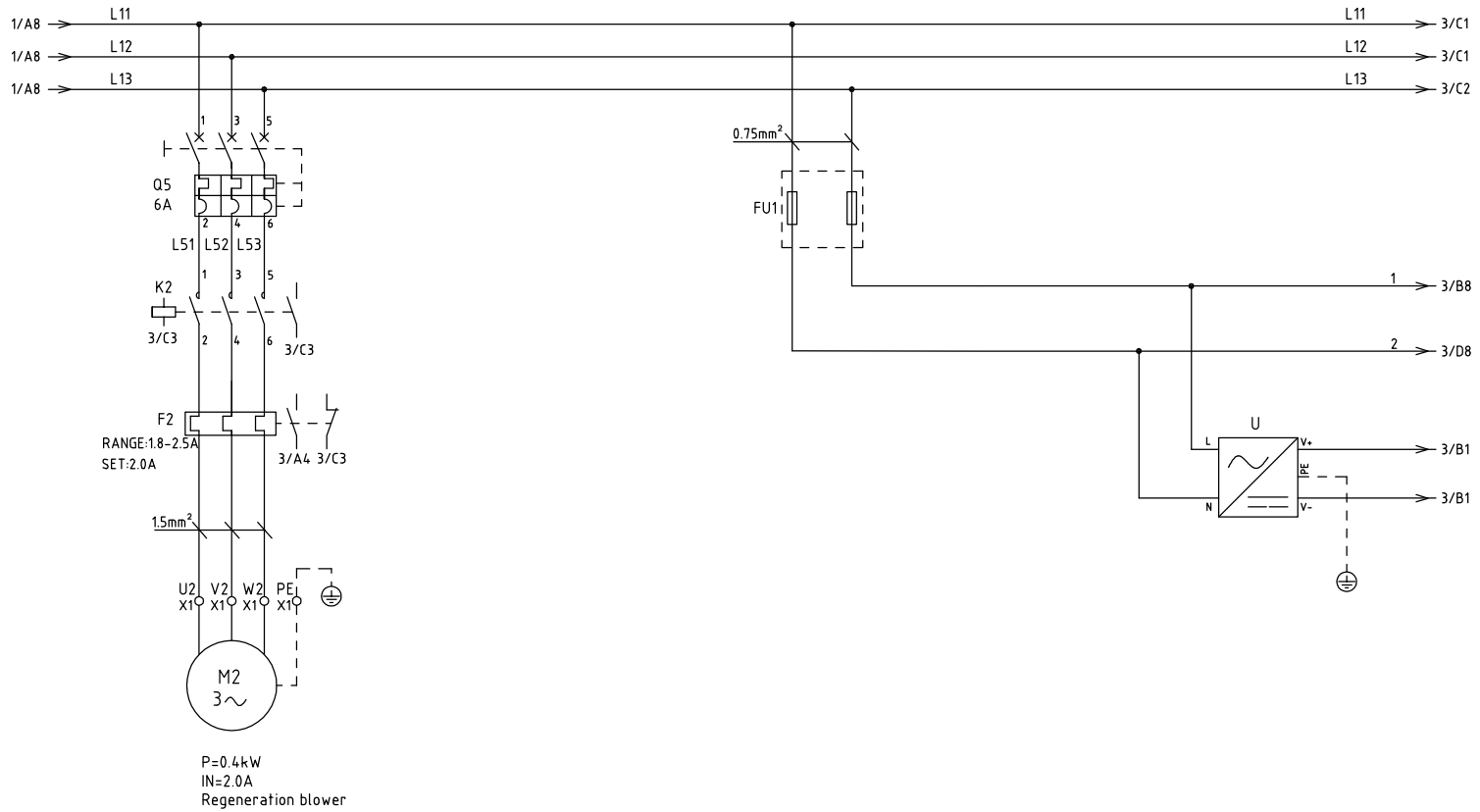

整机版本Ver.D

					Drawer		Version	F	Title SDD-160U(230)/120H Main Circuit Diagram 2	Drawing NO. SDD-160U(230U)/120H-CE-230V-F-2	Scale		Page 2
					Designer		Approved by				Standard	CE	Totally 6 Pages
					Proofread by				信易電熱機械股份有限公司 Shini Plastics Technologies, Inc.		Voltage	230V	
Mark	Before modification	After modification	Modified by	Modify date	Checked by		Date	20171023			Frequency	50Hz	

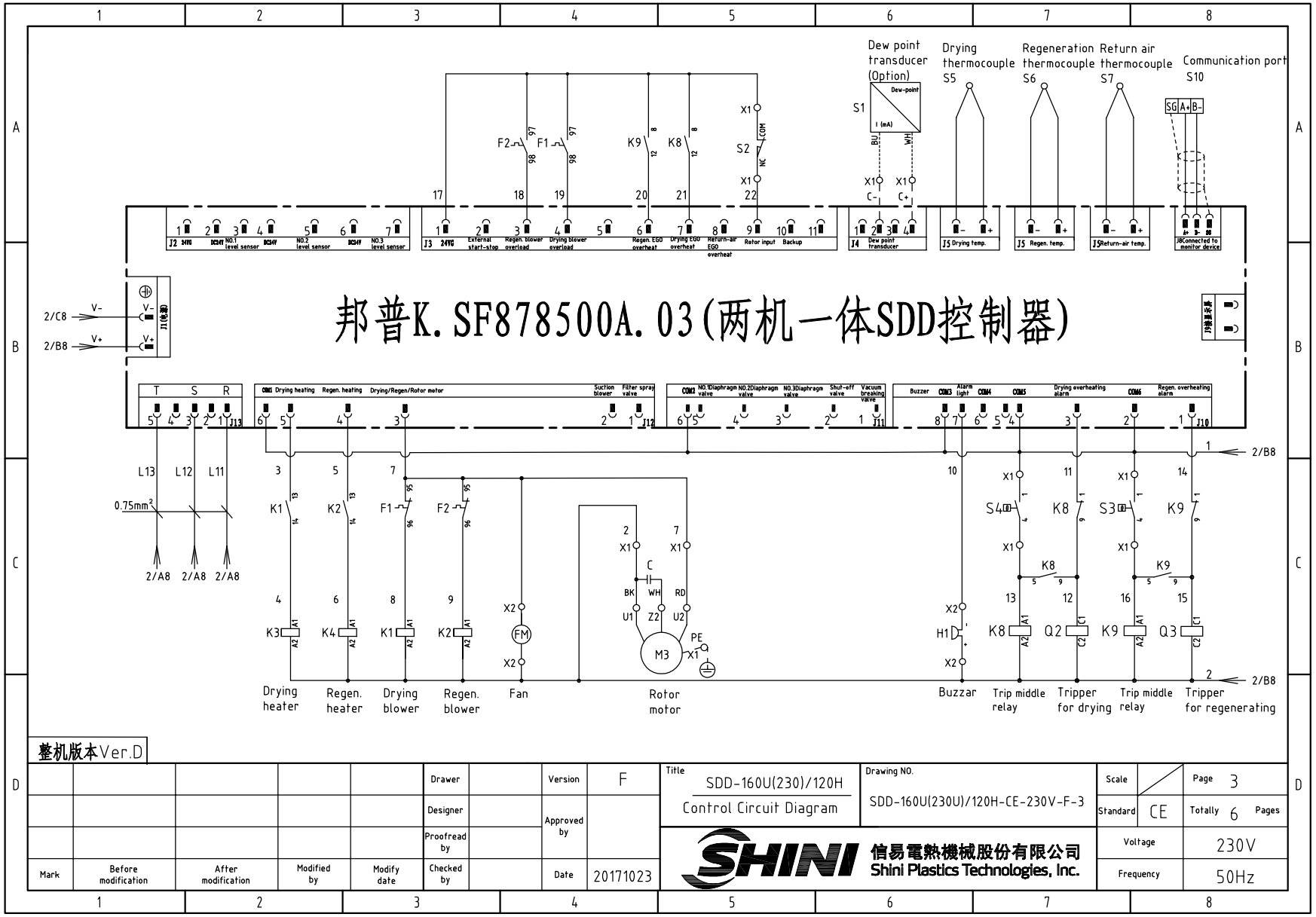

整机版本Ver.D

					Drawer		Version	F	Title: SDD-160U(230)/120H Control Circuit Diagram	Drawing NO. SDD-160U(230U)/120H-CE-230V-F-3	Scale		Page 3
					Designer		Approved by				Standard	CE	Totally 6 Pages
					Proofread by				SHINI 信易電熱機械股份有限公司 Shini Plastics Technologies, Inc.		Voltage	230V	
Mark	Before modification	After modification	Modified by	Modify date	Checked by		Date	20171023			Frequency	50Hz	

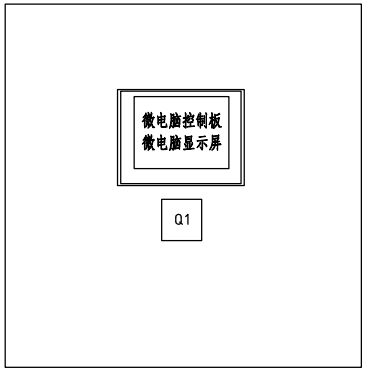

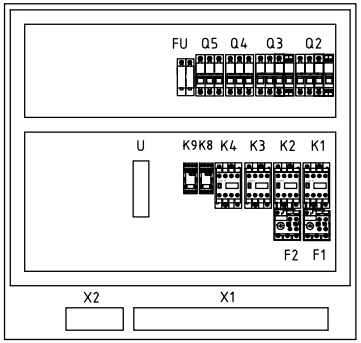

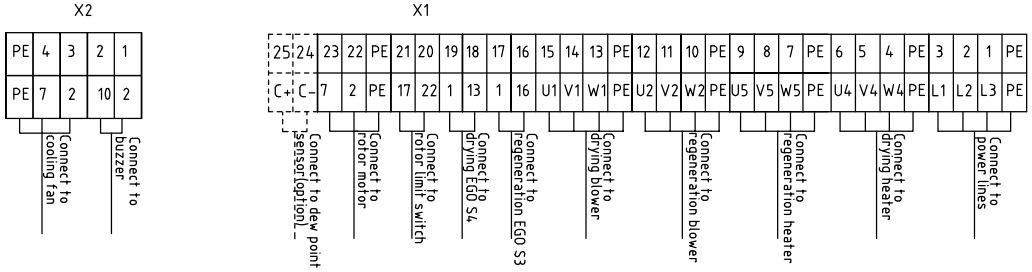

整机版本Ver.D

					Drawer		Version	F	Title SDD-160U(230)/120H Electrical Components Layout	Drawing NO. SDD-160U(230U)/120H-CE-230V-F-4	Scale		Page 4
					Designer		Approved by				Standard	CE	Totally 6 Pages
					Proofread by				信易電熱機械股份有限公司 Shini Plastics Technologies, Inc.		Voltage	230V	
Mark	Before modification	After modification	Modified by	Modify date	Checked by		Date	20171023			Frequency	50Hz	

NO.	Symbol	Name	Manufacturer	Type	Specification	Number	Material number	Remark
1	Q1	Main switch	EATON	P3-63/EA/SVB 63A	63A	1	YE10636300000	
2	Q2	Circuit-breaker	TECO	BM-63C/3025S 3P	25A	1	YE40302503000	
3	Q3	Circuit-breaker	TECO	BM-63C/3016S 3P	16A	1	YE40301603000	
4		Excitation release	----	MX	230V 50/60Hz	2	YE40023560000	
5	Q4	Circuit-breaker	TECO	BM-63C/3010S 3P	10A	1	YE40301003000	
6	Q5	Circuit-breaker	TECO	BM-63C/3006S 3P	6A	1	YE40300603000	
7	K1	Contactor	SIEMENS	3RT6016-1AN21	9A 1NO 220V 50/60Hz	1	YE00601621000	
8	K2	Contactor	SIEMENS	3RT6015-1AN21	7A 1NO 220V 50/60Hz	1	YE00601521000	
9	K3	Contactor	SIEMENS	3RT6026-1AN20	25A 220V 50/60Hz	1	YE00602622000	
10	K4	Contactor	SIEMENS	3RT6018-1AN21	16A 1NO 220V 50/60Hz	1	YE00601800000	
11	K8 K9	Relay+Base	WEIDMULLER	DRM270730LT	220V 50/60Hz	2	YE03270700000	
12	F1	Overload relay	SIEMENS	3RU6116-1FB0	3.5-5A	1	YE01160350000	
13	F2	Overload relay	SIEMENS	3RU6116-1CB0	1.8-2.5A	1	YE01160180000	
14	PCB	Controller	PUMP	K.SF878500A.03	230V 50/60Hz	1	YE80878500100	
15	U	DC power	MEAN WELL	ESA-35-24	OUT=DC24V 1.5A	1	YE71352400100	
16	FU1	Fuse base	CHINT	RT28-32	2P	1	YE41032200000	
17		Fuse	CHINT	10×38 500V	2A	2	YE46002000100	
18	H1	Buzzer	HITPOINT	PK-35A	220V AC/DC	1	YE84003500200	
19	S1	Micro switch	CS	CS 217-OEM	POWER=24VDC OUT=4-20mA	1	YE90021700100	(1)(2)
20	S2	Position limit switch	---	YBLXW-5/11G2	250V 5(4)A	1	----	(1)
21	S3 S4	Temperature protector	---	組合體EGO	115-320℃ 55.13262.160	2	----	(1)
22	S5 S6 S7	Thermocouple	SHINI	---------	---------	3	----	(1)
23	X1	Terminal board	HOLLEYWELL	6mm²	-	6	YE60000603200	
24		Terminal board	HOLLEYWELL	6mm²PE	-	2	YE60000603500	
25		Terminal board	HOLLEYWELL	4mm²	-	9	YE60000403200	

整机版本Ver.D

Notes: (1)Means it's not the material inside the control box. (2)Stands for optional dew-point monitor

Mark	Before modification	After modification	Modified by	Modify date

Drawer		Version	F
Designer		Approved by	
Proofread by			
Checked by		Date	20171023

Title: SDD-160U(230)/120H
Electrical Components List 1

Drawing NO.: SDD-160U(230U)/120H-CE-230V-F-5

信易電熱機械股份有限公司
Shini Plastics Technologies, Inc.

Scale	
Standard	CE
Page	5
Totally	6 Pages
Voltage	230V
Frequency	50Hz

NO.	Symbol	Name	Manufacturer	Type	Specification	Number	Material number	Remark
26		Terminal board	HOLLEYWELL	4mm²PE	-	3	YE60000403500	
27		Terminal board	HOLLEYWELL	2.5mm²	-	8	YE60002503200	
28		Terminal board	HOLLEYWELL	2.5mm²PE	-	1	YE60002503400	
29		Terminal board	HOLLEYWELL	2.5mm²	-	2	YE60002503200	(2)
30	X2	Terminal board	HOLLEYWELL	2.5mm²	-	4	YE60002503200	
31		Terminal board	HOLLEYWELL	2.5mm²PE	-	1	YE60002503400	
32	FM	Fan	-----	12×12CM	230VAC/50/60HZ 40W	1	-----	(1)
33	M1	Blower	SHINI	RB310	220-240V 0.9kW	1	-----	(1)
34	M2	Blower	SHINI	RB205	220-240V 0.4kW	1	-----	(1)
35	M3	Motor	----	3GN-10XK/3GN-60K/3IK15GN-C-T 220V 0.015kW		1	-----	(1)
36	EH1	Pipe heater	SHINI	-----	230V 6.0kW	1	-----	(1)
37	EH2	Pipe heater	SHINI	-----	230V 4kW	1	-----	(1)
38		Terminal block E/GKseries(honeywell)	-----	-----	-----	4	YE60000003900	

整机版本Ver.D

Notes: (1)Means it's not the material inside the control box. (2)Stands for optional dew-point monitor

Mark	Before modification	After modification	Modified by	Modify date

Drawer		Version	F
Designer		Approved by	
Proofread by			
Checked by		Date	20171023

Title: SDD-160U(230)/120H
Electrical Components List 2

Drawing NO.: SDD-160U(230U)/120H-CE-230V-F-6

信易電熱機械股份有限公司
Shini Plastics Technologies, Inc.

Scale		Page	6
Standard	CE	Totally	6 Pages
Voltage	230V		
Frequency	50Hz		

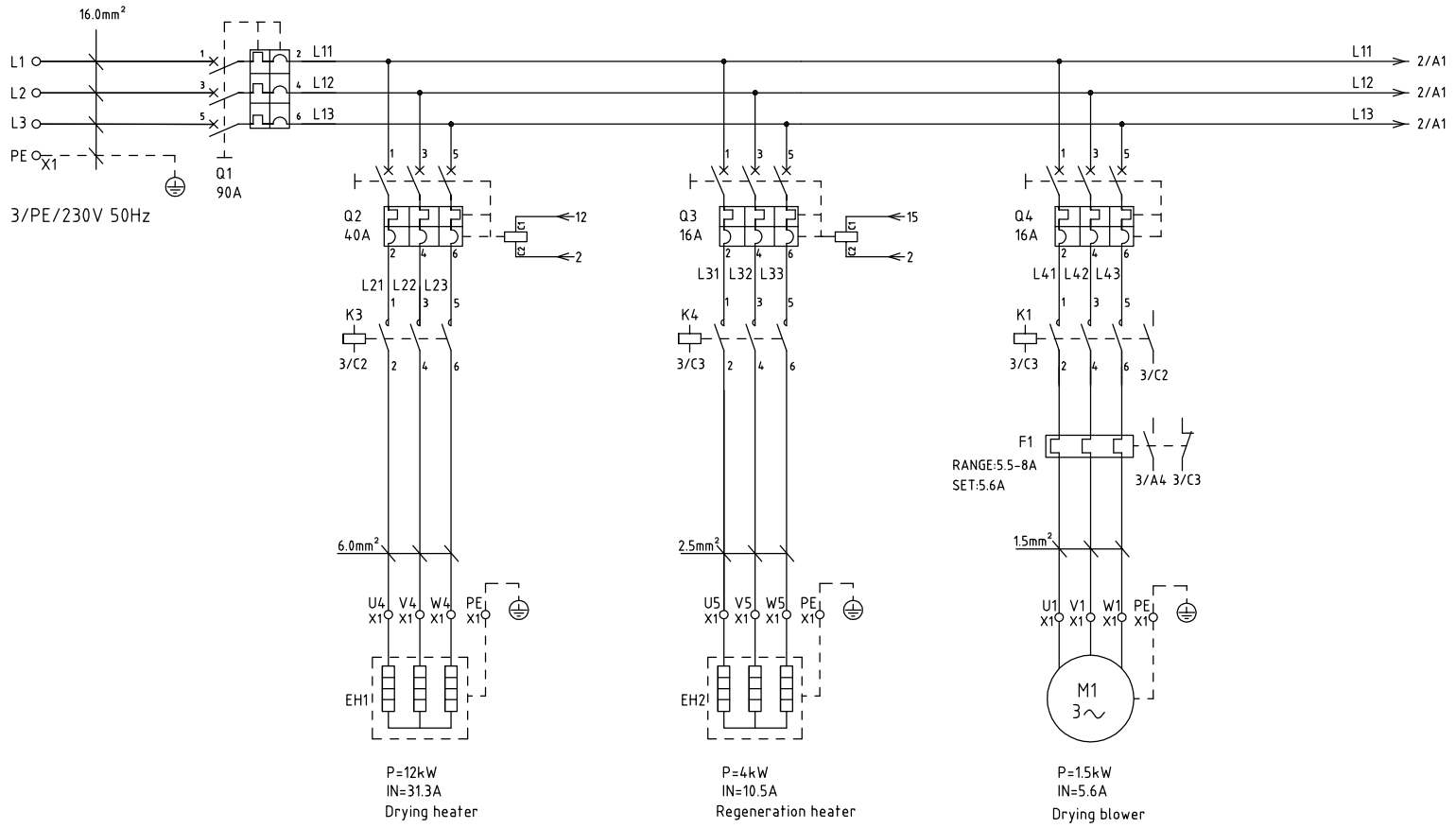

整机版本Ver.D Note: Regeneration heater changed to 6kW when it is 60Hz

					Drawer		Version	F	Title: SDD-300U(450U)/200H Main Circuit Diagram 1	Drawing NO.: SDD-300U(450U)/200H-CE-230V-F-1	Scale	Page 1
					Designer		Approved by				Standard CE	Totally 6 Pages
					Proofread by				信易電熱機械股份有限公司 Shini Plastics Technologies, Inc.		Voltage	230V
Mark	Before modification	After modification	Modified by	Modify date	Checked by		Date	20170929			Frequency	50Hz

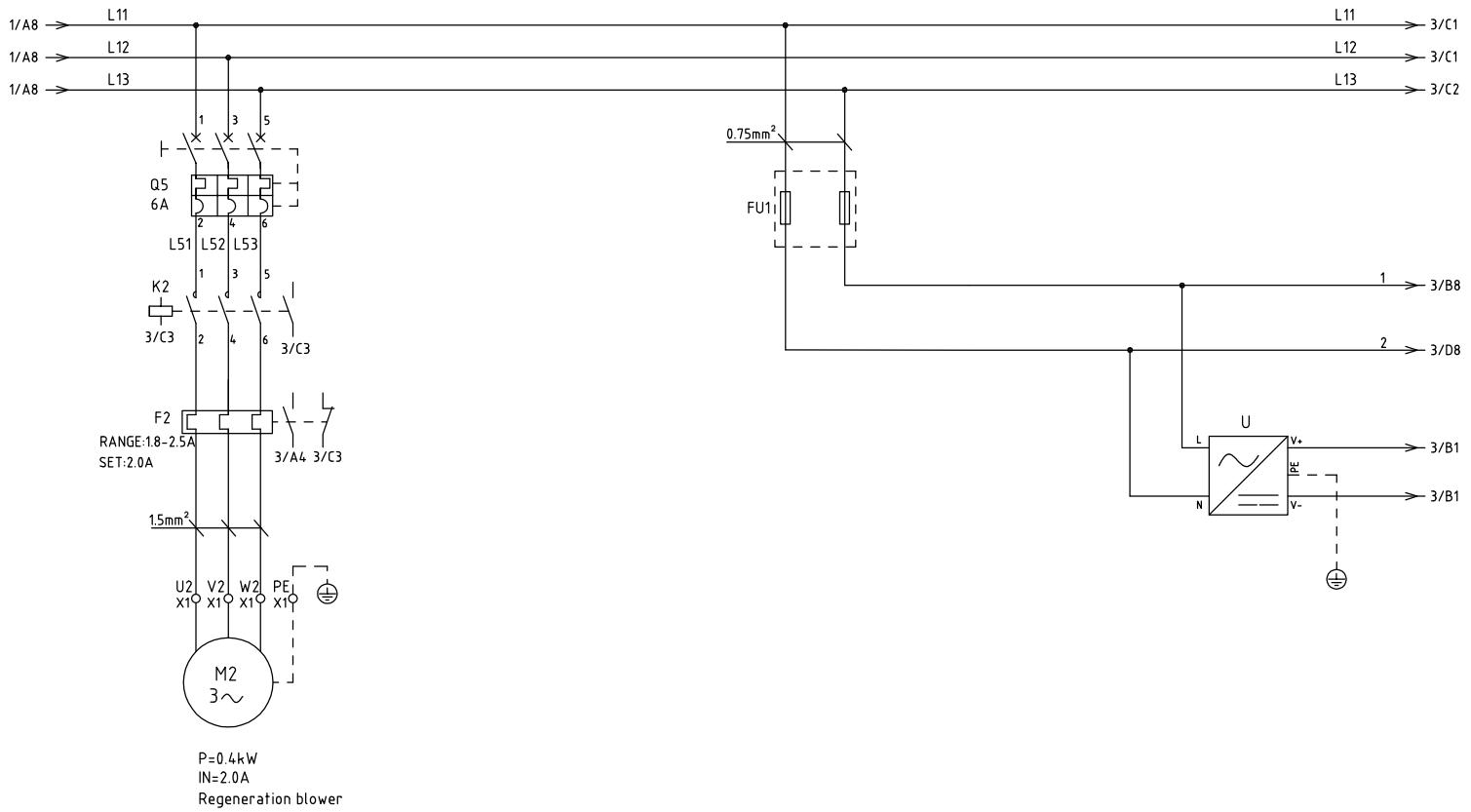

整机版本Ver.D

					Drawer		Version	F	Title: SDD-300U(450U)/200H Main Circuit Diagram 2	Drawing NO. SDD-300U(450U)/200H-CE-230V-F-2	Scale		Page 2
					Designer		Approved by				Standard	CE	Totally 6 Pages
					Proofread by				信易電熱機械股份有限公司 Shini Plastics Technologies, Inc.		Voltage	230V	
Mark	Before modification	After modification	Modified by	Modify date	Checked by		Date	20170929			Frequency	50Hz	

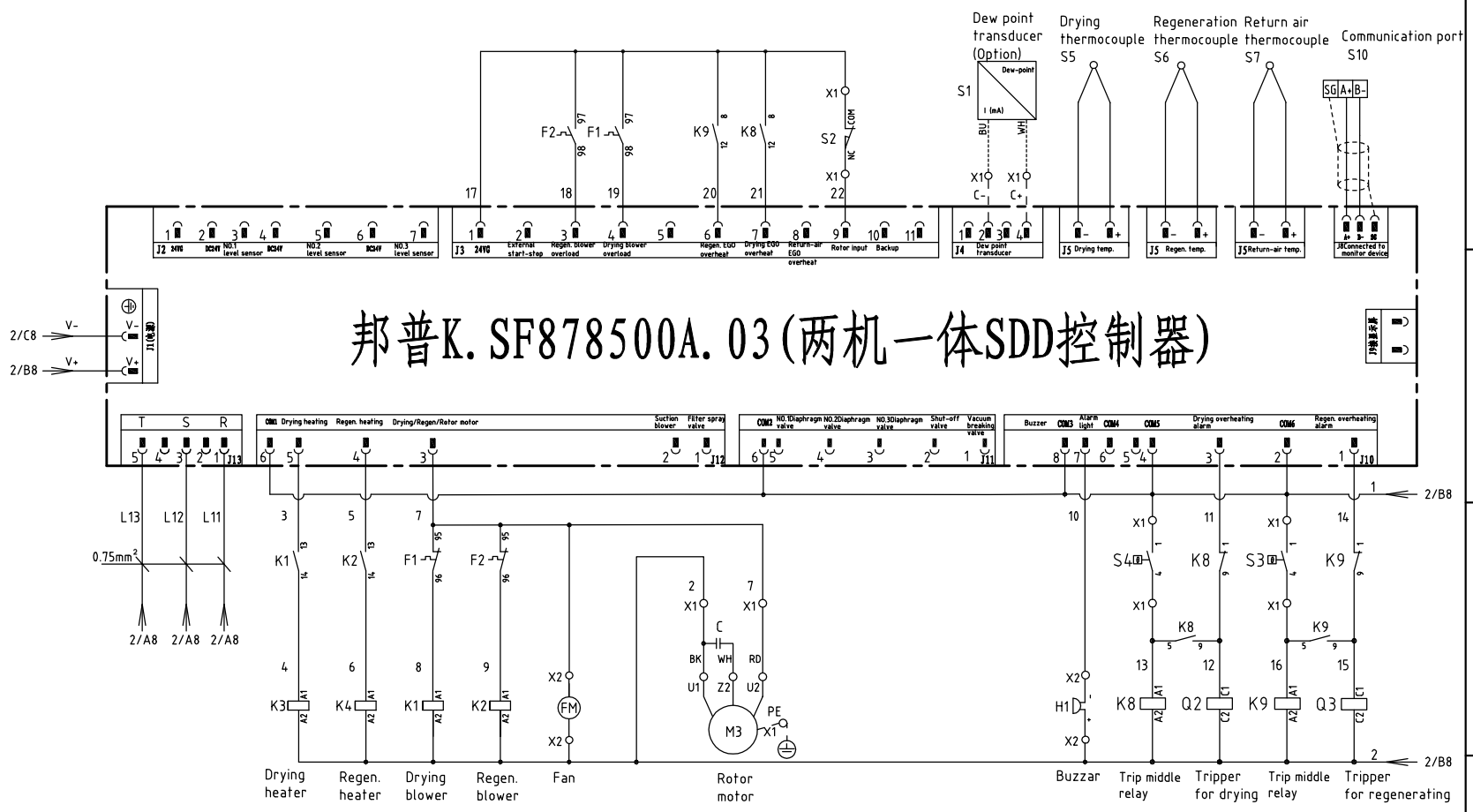

整机版本Ver.D

					Drawer		Version	F	Title: SDD-300U(450U)/200H Control Circuit Diagram	Drawing NO. SDD-300U(450U)/200H-CE-230V-F-3	Scale	Page 3
					Designer		Approved by				Standard CE	Totally 6 Pages
					Proofread by				SHINI 信易電熱機械股份有限公司 Shini Plastics Technologies, Inc.		Voltage	230V
Mark	Before modification	After modification	Modified by	Modify date	Checked by		Date	20170929			Frequency	50Hz

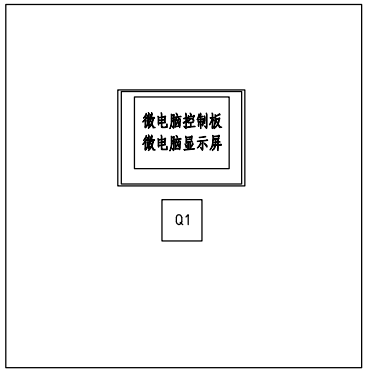

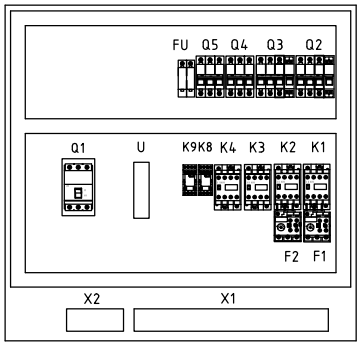

X2

PE	4	3	2	1
PE	7	2	10	2
	Connect to cooling fan			Connect to buzzer

X1

22	21	20	19	PE	18	17	16	15	14	13	12	11	10	PE	9	8	7	PE	6	5	4	PE	3	2	1	PE	PE
C+	C-	7	2	PE	17	22	1	13	1	16	U1	V1	W1	PE	U2	V2	W2	PE	U5	V5	W5	PE	U4	V4	W4	PE	PE
	Connect to dew point sensor(option)		Connect to rotor motor		Connect to rotor limit switch			Connect to drying EGO S4		Connect to regeneration EGO S3			Connect to drying blower				Connect to regeneration blower				Connect to regeneration heater				Connect to drying heater		Connect to power lines

整机版本Ver.D

					Drawer		Version	F	Title SDD-300U(450U)/200H Electrical Components Layout	Drawing NO. SDD-300U(450U)/200H-CE-230V-F-4	Scale		Page 4
					Designer		Approved by				Standard	CE	Totally 6 Pages
					Proofread by				SHINI 信易電熱機械股份有限公司 Shini Plastics Technologies, Inc.		Voltage	230V	
Mark	Before modification	After modification	Modified by	Modify date	Checked by		Date	20170929			Frequency	50Hz	

NO.	Symbol	Name	Manufacturer	Type	Specification	Number	Material number	Remark
1	Q1	Breaker interlock	ABB	A1A125TMF90	90A	1	YE41109200000	
2	Q2	Circuit-breaker	TECO	BM-63C/3040S 3P	40A	1	YE40304003000	
3	Q3 Q4	Circuit-breaker	TECO	BM-63C/3016S 3P	16A	2	YE40301603000	
4	Q5	Circuit-breaker	TECO	BM-63C/3006S 3P	6A	1	YE40300603000	
5		Excitation release	CHINT	MX	220V 50/60Hz	2	YE40023560000	
6	K1	Contactor	SIEMENS	3RT6016-1AN21	9A 1NO 220V 50/60Hz	1	YE00601621000	
7	K2	Contactor	SIEMENS	3RT6016-1AN21	9A 1NO 220V 50/60Hz	1	YE00601621000	
8	K3	Contactor	SIEMENS	3RT6028-1AN21	38A 220V 50/60Hz	1	YE00602822000	
9	K4	Contactor	SIEMENS	3RT6018-1AN21	16A 220V 50/60Hz	1	YE00601800000	
10	K8 K9	Relay	WEIDMULLER	DRM270730LT	220V 50/60Hz	2	YE03270700000	
11	F1	Overload relay	SIEMENS	3RU6116-1HB0	5.5-8A	1	YE01160550000	
12	F2	Overload relay	SIEMENS	3RU6116-1CB0	1.8-2.5A	1	YE01160180000	
13	PCB	Controller	PUMP	K.SF878500A.03	-----	1	YE80878500100	
14	U	DC power	MEAN WELL	ESA-35-24	OUT=DC24V 1.5A	1	YE71352400100	
15	FU1	Fuse base	CHINT	RT28-32	2P	1	YE41032200000	
16		Fuse	CHINT	10×38 500V	2A	2	YE46002000100	
17	H1	Buzzer	HITPOINT	PK-35A	220VAC	1	YE84003500200	
18	S1	Dew-point transducer	CS	CS 217-OEM	POWER=24VDC OUT=4-20mA	1	YE90021700100	(1)(2)
19	S2	Micro switch	TEND	YBLXW-5/11G2	250V 5(4)A	1	----	(1)
20	S3	Temperature protector	EGO	---	115-320 °C	1	----	(1)
21	S4	Temperature protector	EGO	---	115-320 °C	1	----	(1)
22	S5	Thermocouple	SHINI	ST-K	K	1	----	(1)
23	S6 S7	Thermocouple	SHINI	ST-K	K	2	----	(1)
24	X1	Terminal board	HOLLEYWELL	16mm²PE	-	1	YE60001603500	
25		Terminal board	HOLLEYWELL	6mm²	-	3	YE60000603200	

整机版本Ver.D Notes: (1)Means it's not the material inside the control box. (2)Stands for optional dew-point monitor

Mark	Before modification	After modification	Modified by	Modify date

Drawer		Version	F
Designer		Approved by	
Proofread by			
Checked by		Date	20170929

Title: SDD-300U(450U)/200H
Electrical Components List 1

Drawing NO.: SDD-300U(450U)/200H-CE-230V-F-5

信易電熱機械股份有限公司
Shini Plastics Technologies, Inc.

Scale		Page	5
Standard	CE	Totally	6 Pages
Voltage	230V		
Frequency	50Hz		

NO.	Symbol	Name	Manufacturer	Type	Specification	Number	Material number	Remark
26		Terminal board	HOLLEYWELL	6mm²PE	-	1	YE60000603500	
27		Terminal board	HOLLEYWELL	4mm²	-	9	YE60000403200	
28		Terminal board	HOLLEYWELL	4mm²PE	-	3	YE60000403500	
29		Terminal board	HOLLEYWELL	2.5mm²	-	8	YE60002503200	
30		Terminal board	HOLLEYWELL	2.5mm²PE	-	1	YE60002503400	
31		Terminal board	HOLLEYWELL	2.5mm²	-	2	YE60002503200	(2)
32	X2	Terminal board	HOLLEYWELL	2.5mm²	-	4	YE60002503200	
33		Terminal board	HOLLEYWELL	2.5mm²PE	-	1	YE60002503400	
34	FM	Fan	SUNON	DP-200A	230VAC 40W	1	-----	(1)
35	M1	Blower	SHINI	-----	230V 1.5kW	1	-----	(1)
36	M2	Blower	SHINI	-----	230V 0.4kW	1	-----	(1)
37	M3	Motor	----	-----	230V 0.006kW	1	-----	(1)
38	EH1	Pipe heater	SHINI	-----	230V 12kW	1	-----	(1)
39	EH2	Pipe heater	SHINI	-----	230V 4kW	1	----- 50Hz机型	(1)
40	EH2	Pipe heater	SHINI	-----	230V 6kW	1	----- 60Hz机型	(1)
40	S10	Communication interface board RS-485 (double Dsub-9pin connector)	--	--	--	1	YE90048501200	
41		Shell RS485(SAL-700G-A-19)0	--	--	--	1	YR40048500000	
42		Terminal block E/GKseries(honeywell)			PCS	5	YE60000003900	

整机版本Ver.D Notes: (1)Means it's not the material inside the control box. (2)Stands for optional dew-point monitor

Mark	Before modification	After modification	Modified by	Modify date

Drawer		Version	F
Designer		Approved by	
Proofread by			
Checked by		Date	20170929

Title: SDD-300U(450U)/200H
Electrical Components List 2

Drawing NO.: SDD-300U(450U)/200H-CE-230V-F-6

Scale: /
Standard: CE
Page 6
Totally 6 Pages
Voltage: 230V
Frequency: 50Hz

信易電熱機械股份有限公司
Shini Plastics Technologies, Inc.

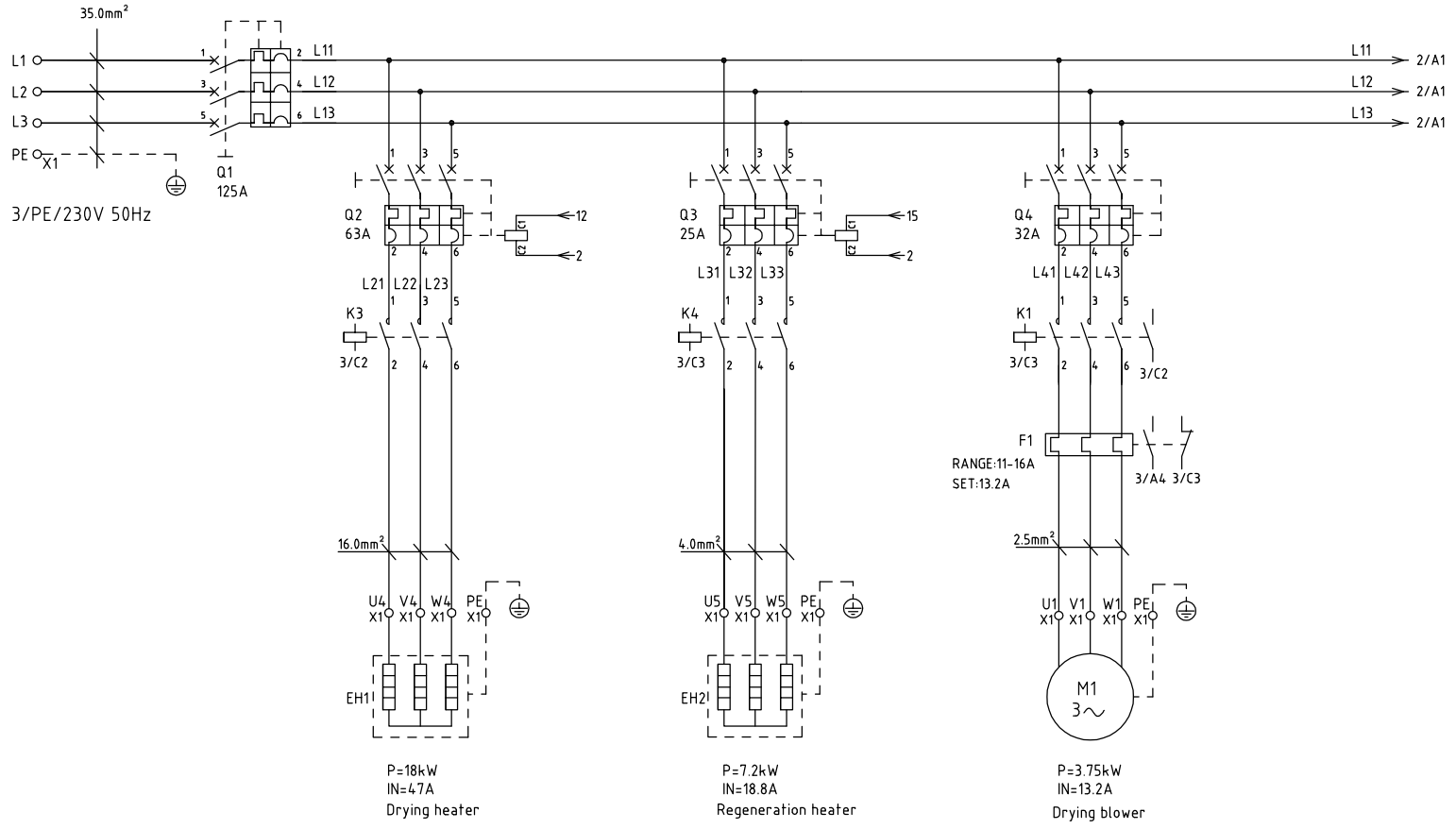

整机版本Ver.C

					Drawer		Version	D	Title: SDD-600U(750U)/400H Main Circuit Diagram 1	Drawing NO. SDD-600U(750U)/400H-CE-230V-D-1	Scale	Page 1
					Designer		Approved by				Standard CE	Totally 6 Pages
					Proofread by				SHINI 信易電熱機械股份有限公司 Shini Plastics Technologies, Inc.		Voltage	230V
Mark	Before modification	After modification	Modified by	Modify date	Checked by		Date	20170929			Frequency	50Hz

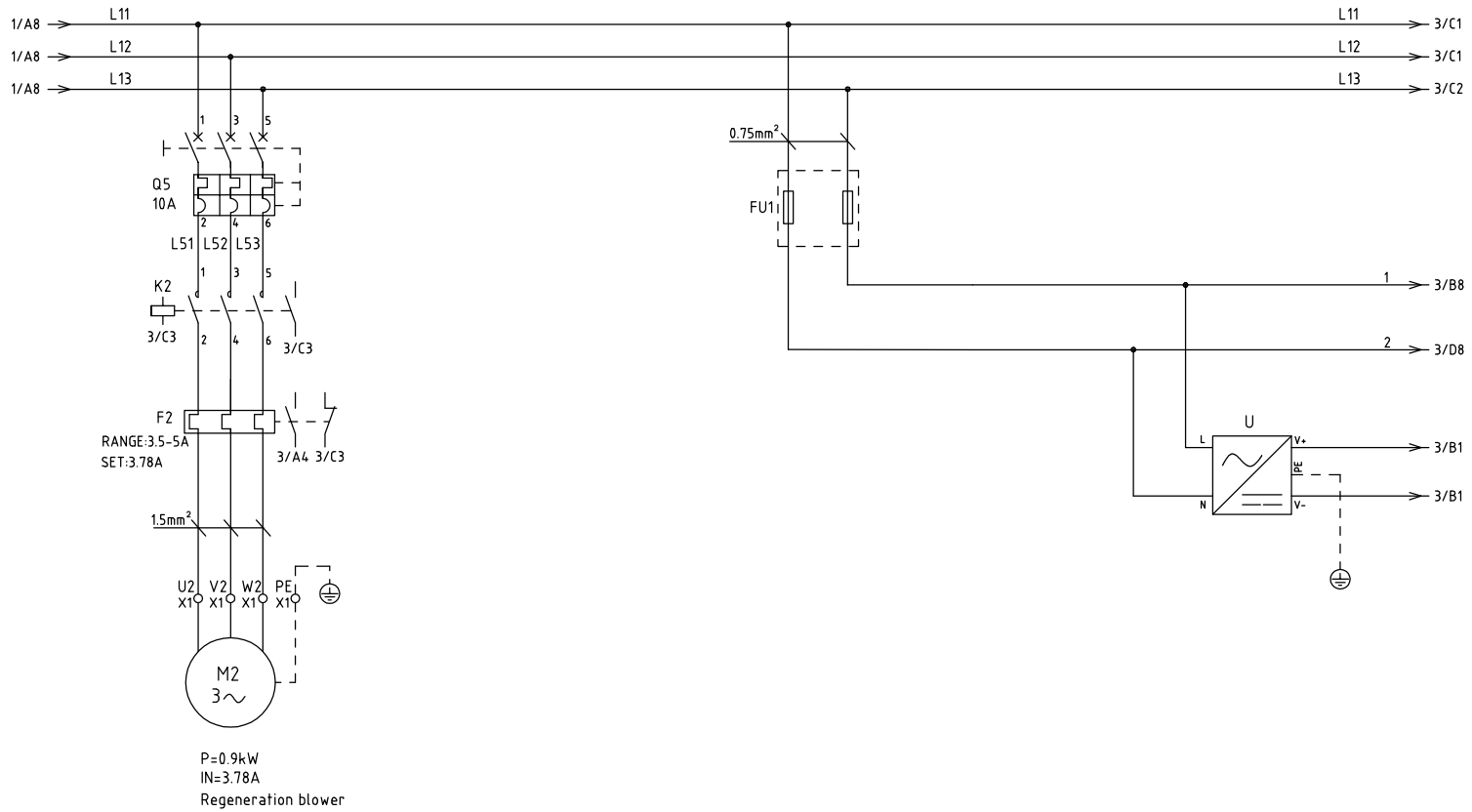

整机版本Ver.C

					Drawer		Version	D	Title: SDD-600U(750U)/400H Main Circuit Diagram 2	Drawing NO. SDD-600U(750U)/400H-CE-230V-D-2	Scale		Page 2
					Designer		Approved by				Standard	CE	Totally 6 Pages
					Proofread by				信易電熱機械股份有限公司 Shini Plastics Technologies, Inc.		Voltage	230V	
Mark	Before modification	After modification	Modified by	Modify date	Checked by		Date	20170929			Frequency	50Hz	

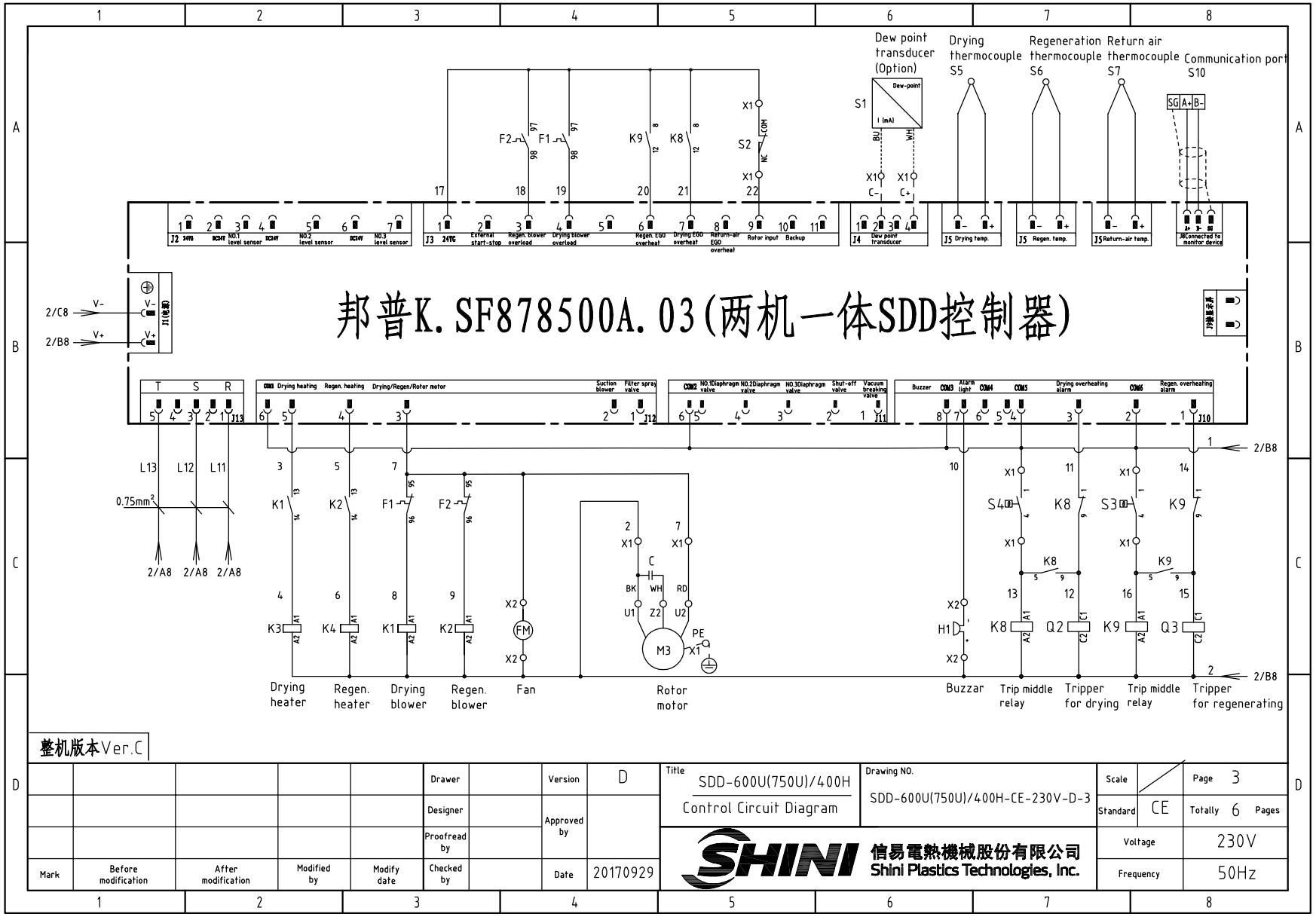

整机版本Ver.C

					Drawer		Version	D	Title: SDD-600U(750U)/400H Control Circuit Diagram	Drawing NO. SDD-600U(750U)/400H-CE-230V-D-3	Scale	Page 3
					Designer		Approved by				Standard CE	Totally 6 Pages
					Proofread by				信易電熱機械股份有限公司 Shini Plastics Technologies, Inc.		Voltage	230V
Mark	Before modification	After modification	Modified by	Modify date	Checked by		Date	20170929			Frequency	50Hz

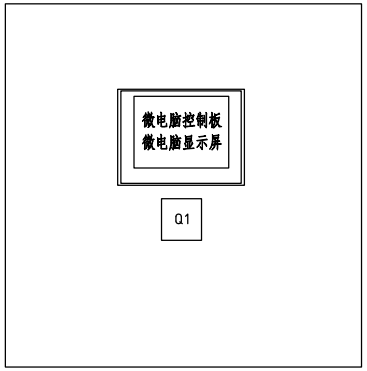

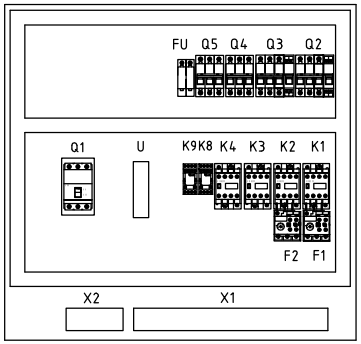

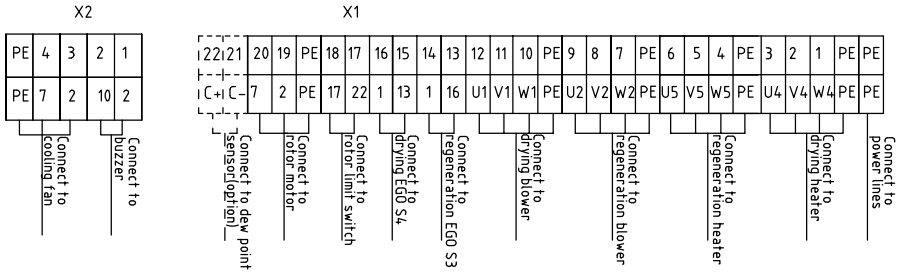

整机版本Ver.C

					Drawer		Version	D	Title SDD-600U(750U)/400H Electrical Components Layout	Drawing NO. SDD-600U(750U)/400H-CE-230V-D-4	Scale		Page 4
					Designer		Approved by				Standard	CE	Totally 6 Pages
					Proofread by				信易電熱機械股份有限公司 Shini Plastics Technologies, Inc.		Voltage	230V	
Mark	Before modification	After modification	Modified by	Modify date	Checked by		Date	20170929			Frequency	50Hz	

NO.	Symbol	Name	Manufacturer	Type	Specification	Number	Material number	Remark
1	Q1	Breaker interlock	ABB	A1A125TMF125	125A	1	YE41161400000	
2	Q2	Circuit-breaker	TECO	BM-63C/3063S 3P	63A	1	YE40306303000	
3	Q3	Circuit-breaker	TECO	BM-63C/3025S 3P	25A	1	YE40302503000	
4	Q4	Circuit-breaker	TECO	BM-63C/3032S 3P	32A	1	YE40303203000	
5	Q5	Circuit-breaker	TECO	BM-63C/3010S 3P	10A	1	YE40301003000	
6		Excitation release	CHINT	MX	220V 50/60Hz	2	YE40023560000	
7	K1	Contactor	SIEMENS	3RT6026-1AN20	25A 220V 50/60Hz	1	YE00602622000	
8	K2	Contactor	SIEMENS	3RT6016-1AN21	9A 1NO 220V 50/60Hz	1	YE00601621000	
9	K3	Contactor	SIEMENS	3RT5044-1AN20	65A 220V 50/60Hz	1	YE00504400000	
10	K4	Contactor	SIEMENS	3RT6027-1AN21	32A 220V 50/60Hz	1	YE00602722000	
11	K8 K9	Relay	WEIDMULLER	DRM270730LT	220V 50/60Hz	2	YE03270700000	
12	F1	Overload relay	SIEMENS	3RU6126-4AB0	11-16A	1	YE01260110000	
13	F2	Overload relay	SIEMENS	3RU6116-1FB0	3.5-5A	1	YE01160350000	
14	PCB	Controller	PUMP	K.SF878500A.03	-----	1	YE80878500100	
15	U	DC power	MEAN WELL	ESA-35-24	OUT=DC24V 1.5A	1	YE71352400100	
16	FU1	Fuse base	CHINT	RT28-32	2P	1	YE41032200000	
17		Fuse	CHINT	10×38 500V	2A	2	YE46002000100	
18	H1	Buzzer	HITPOINT	PK-35A	220VAC	1	YE84003500200	
19	S1	Dew-point transducer	CS	CS 217-OEM	POWER=24VDC OUT=4-20mA	1	YE90021700100	(2)
20	S2	Micro switch	TEND	YBLXW-5/11G2	250V 5(4)A	1	----------	(1)
21	S3	Temperature protector	EGO	---	115-320 °C	1	----------	(1)
22	S4	Temperature protector	EGO	---	115-320 °C	1	----------	(1)
23	S5 S6 S7	Thermocouple	SHINI	ST-K	K	3	---	(1)
24	X1	Terminal board	HOLLEYWELL	35mm²PE	-	1	YE60003503500	
25		Terminal board	HOLLEYWELL	16mm²	-	3	YE61160000000	

整机版本Ver.C

Notes: (1)Means it's not the material inside the control box. (2)Stands for optional dew-point monitor

Mark	Before modification	After modification	Modified by	Modify date

Drawer		Version	D
Designer		Approved by	
Proofread by			
Checked by		Date	20170929

Title: SDD-600U(750U)/400H Electrical Components List 1

Drawing NO.: SDD-600U(750U)/400H-CE-230V-D-5

信易電熱機械股份有限公司
Shini Plastics Technologies, Inc.

Scale	
Standard	CE
Page	5
Totally	6 Pages
Voltage	230V
Frequency	50Hz

NO.	Symbol	Name	Manufacturer	Type	Specification	Number	Material number	Remark
26		Terminal board	HOLLEYWELL	16mm²PE	-	1	YE60001603500	
27		Terminal board	HOLLEYWELL	4mm²	-	9	YE60000403200	
28		Terminal board	HOLLEYWELL	4mm²PE	-	3	YE60000403500	
29		Terminal board	HOLLEYWELL	2.5mm²	-	8	YE60002503200	
30		Terminal board	HOLLEYWELL	2.5mm²PE	-	1	YE60002503400	
31		Terminal board	HOLLEYWELL	2.5mm²	-	2	YE60002503200	(2)
32	X2	Terminal board	HOLLEYWELL	2.5mm²	-	4	YE60002503200	
33		Terminal board	HOLLEYWELL	2.5mm²PE	-	1	YE60002503400	
34	FM	Fan	SUNON	DP-200A	230VAC 40W	1	-----	(1)
35	M1	Blower	SHINI	-----	230V 3.75kW	1	-----	(1)
36	M2	Blower	SHINI	-----	230V 0.9kW	1	-----	(1)
37	M3	Motor	----	-----	230V 0.015kW	1	-----	(1)
38	EH1	Pipe heater	SHINI	-----	230V 18kW	1	-----	(1)
39	EH2	Pipe heater	SHINI	-----	230V 7.2kW	1	-----	(1)
40	S10	Communication interface board RS-485 (double Dsub-9pin connector)	--	--	--	1	YE90048501200	
41		Shell RS485(SAL-700G-A-19)0	--	--	--	1	YR40048500000	
42		Terminal block E/GKseries(honeywell)			PCS	5	YE60000003900	

整机版本Ver.C

Notes: (1)Means it's not the material inside the control box. (2)Stands for optional dew-point monitor

Mark	Before modification	After modification	Modified by	Modify date

Drawer		Version	D
Designer		Approved by	
Proofread by			
Checked by		Date	20170929

Title: SDD-600U(750U)/400H Electrical Components List 2

Drawing NO.: SDD-600U(750U)/400H-CE-230V-D-6

SHINI 信易電熱機械股份有限公司 Shini Plastics Technologies, Inc.

Scale	
Standard	CE
Page	6
Totally	6 Pages
Voltage	230V
Frequency	50Hz

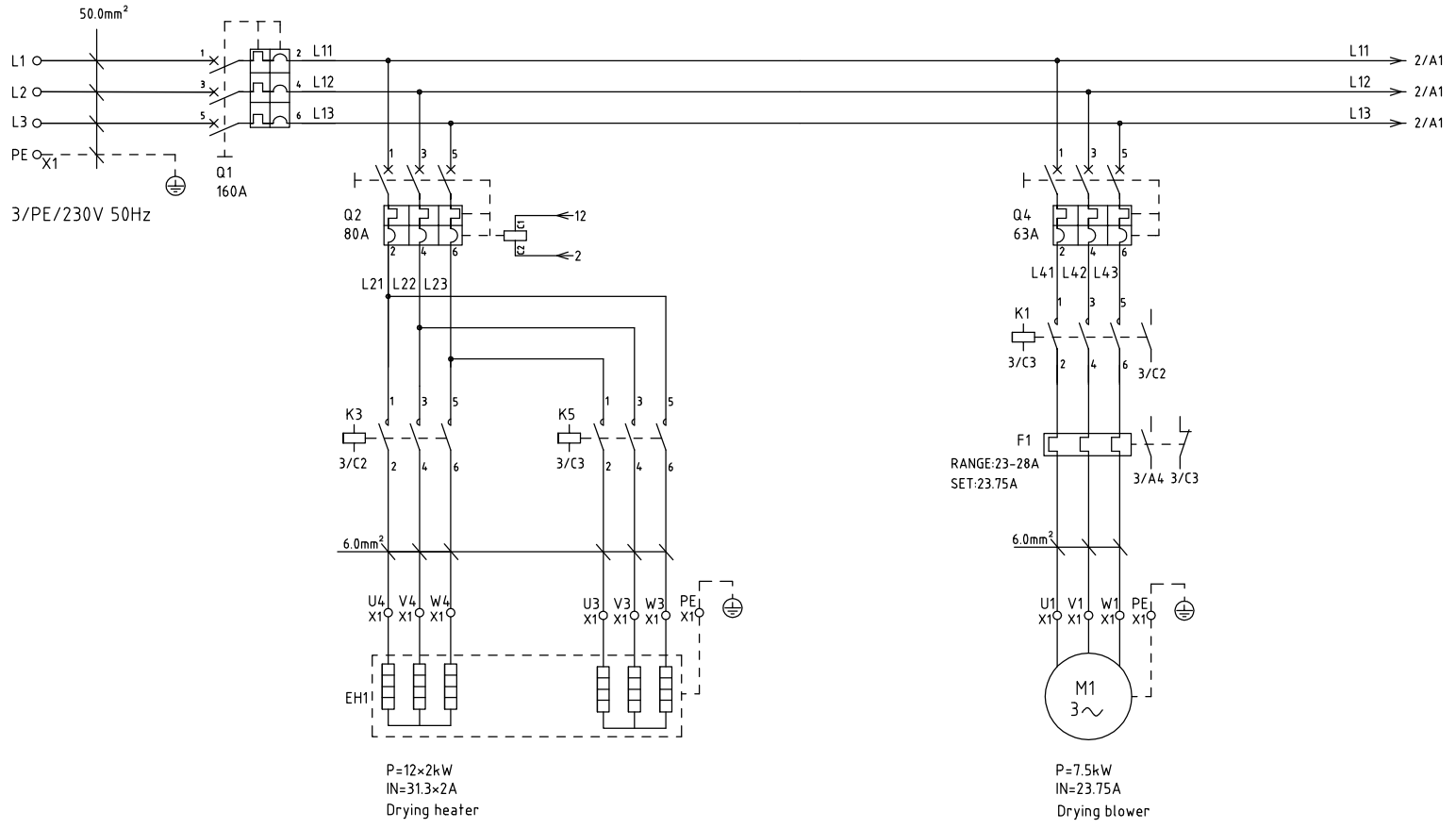

整机版本Ver.D

					Drawer		Version	E	Title: SDD-900U/700H	Drawing NO.	Scale	Page 1
					Designer		Approved by		Main Circuit Diagram 1	SDD-900U/700H-CE-230V-E-1	Standard CE	Totally 6 Pages
					Proofread by				SHINI 信易電熱機械股份有限公司 Shini Plastics Technologies, Inc.		Voltage	230V
Mark	Before modification	After modification	Modified by	Modify date	Checked by		Date	20170929			Frequency	50Hz

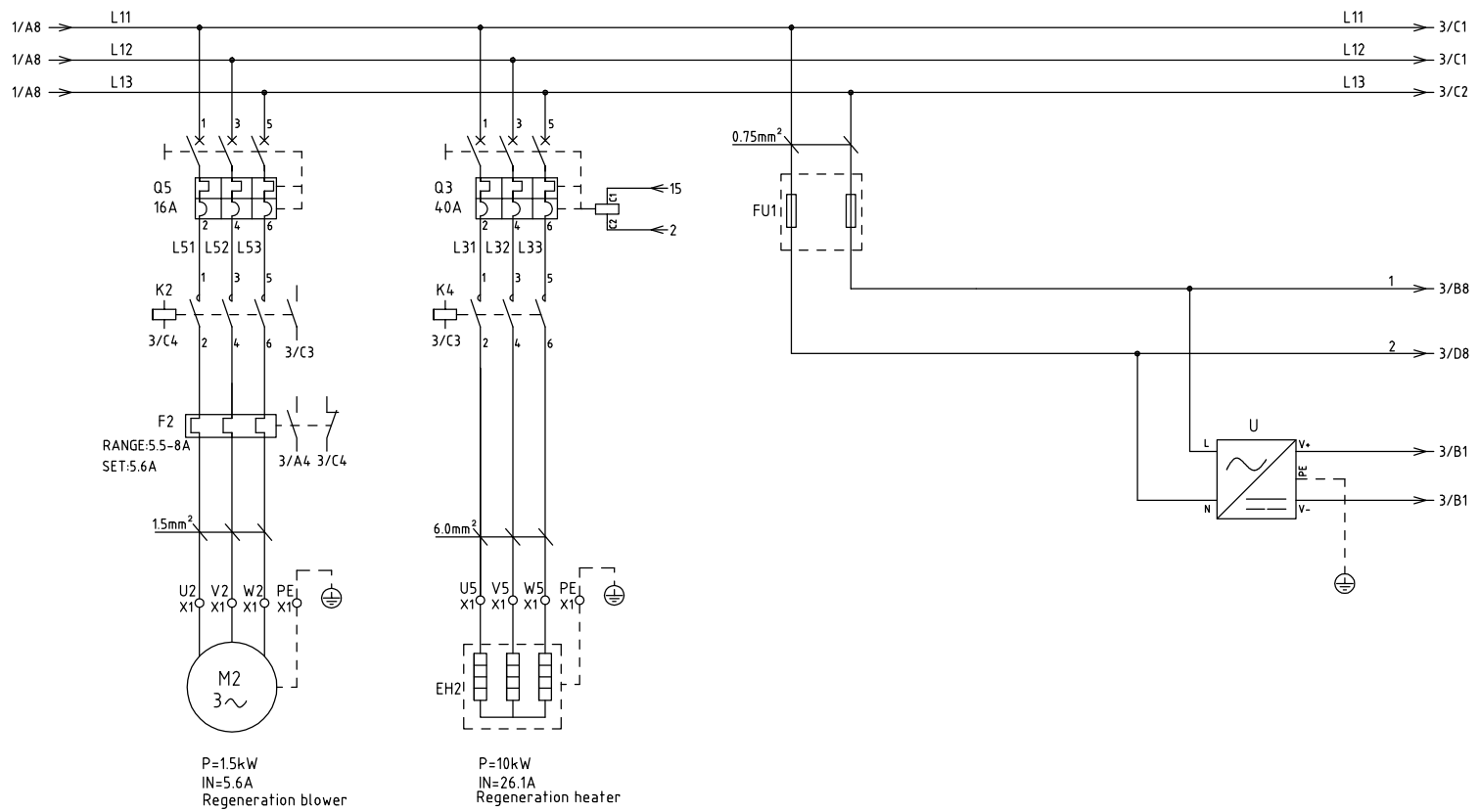

整机版本Ver.D

					Drawer		Version	E	Title: SDD-900U/700H Main Circuit Diagram 2	Drawing NO. SDD-900U/700H-CE-230V-E-2	Scale	Page 2
					Designer		Approved by				Standard CE	Totally 6 Pages
					Proofread by				信易電熱機械股份有限公司 Shini Plastics Technologies, Inc.		Voltage	230V
Mark	Before modification	After modification	Modified by	Modify date	Checked by		Date	20170929			Frequency	50Hz

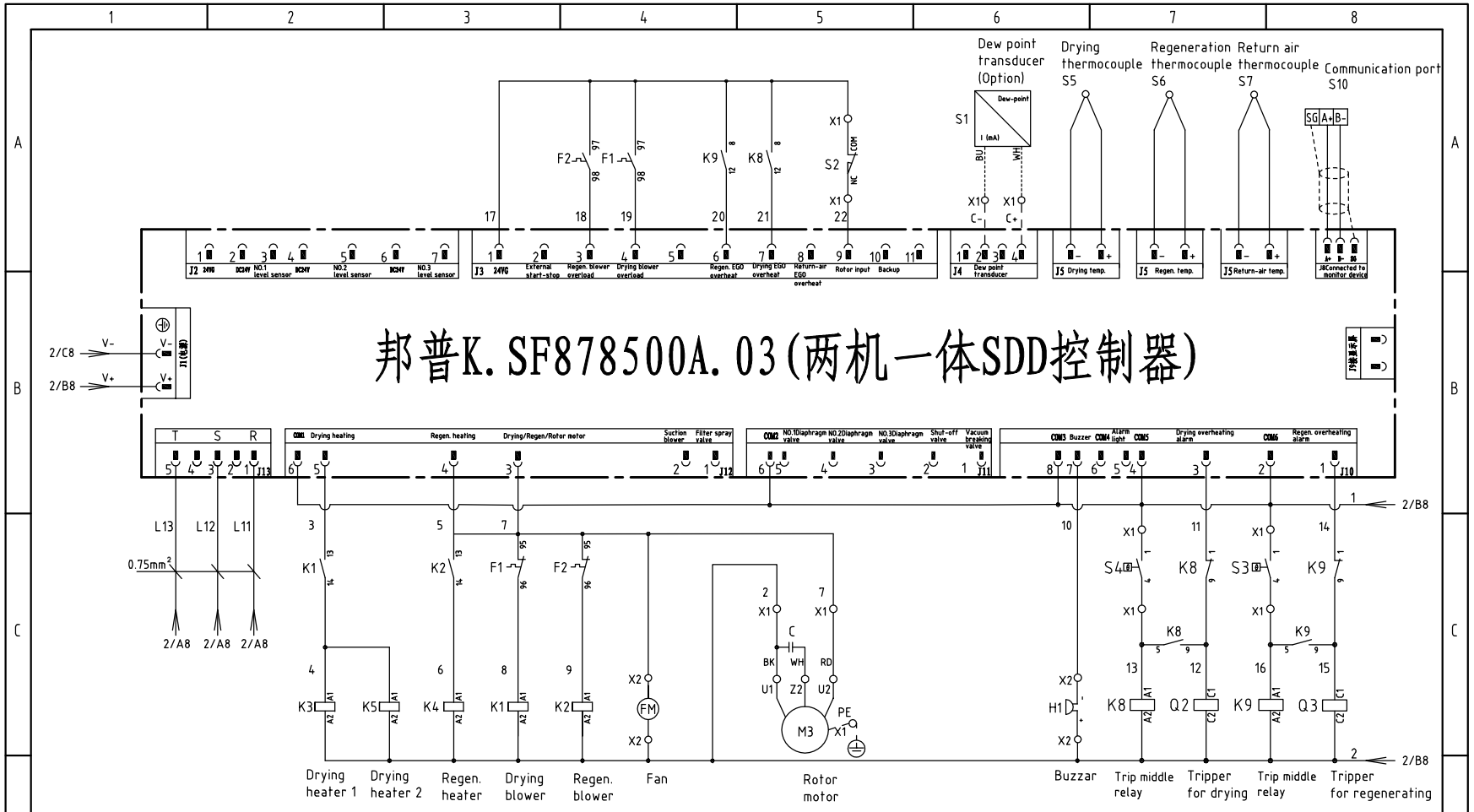

整机版本Ver.D

					Drawer		Version	E	Title: SDD-900U/700H Control Circuit Diagram	Drawing NO. SDD-900U/700H-CE-230V-E-3	Scale	Page 3
					Designer		Approved by				Standard CE	Totally 6 Pages
					Proofread by				SHINI 信易電熱機械股份有限公司 Shini Plastics Technologies, Inc.		Voltage	230V
Mark	Before modification	After modification	Modified by	Modify date	Checked by		Date	20170929			Frequency	50Hz

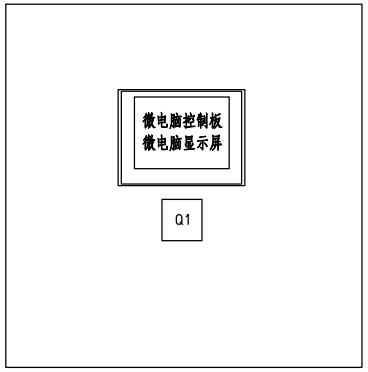

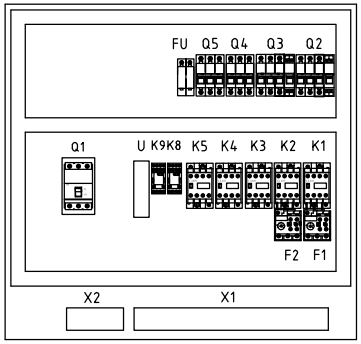

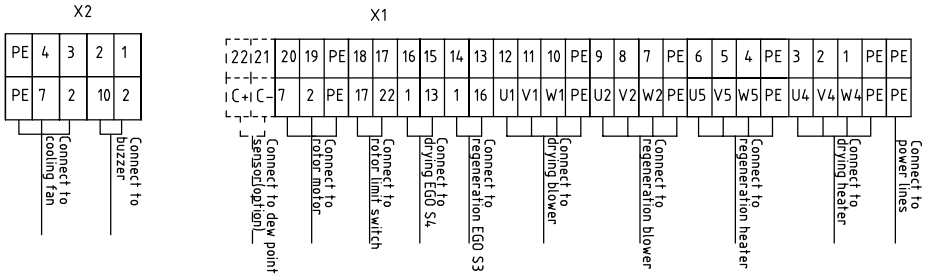

整机版本Ver.D

					Drawer		Version	E	Title SDD-900U/700H Electrical Components Layout	Drawing NO. SDD-900U/700H-CE-230V-E-4	Scale		Page 4
					Designer		Approved by				Standard	CE	Totally 6 Pages
					Proofread by				信易電熱機械股份有限公司 Shini Plastics Technologies, Inc.		Voltage	230V	
Mark	Before modification	After modification	Modified by	Modify date	Checked by		Date	20170929			Frequency	50Hz	

NO.	Symbol	Name	Manufacturer	Type	Specification	Number	Material number	Remark
1	Q1	Breaker interlock	ABB	A2B250TMF160	160A	1	YE41161500000	
2	Q4	Circuit-breaker	TECO	BM-63C/3063S 3P	63A	1	YE40306303000	
3	Q5	Circuit-breaker	TECO	BM-63C/3016S 3P	16A	1	YE40301603000	
4	Q2	Circuit-breaker	TECO	BM-100D/3080S 3P	80A	1	YE40308003000	
5	Q3	Circuit-breaker	TECO	BM-63C/3040S 3P	40A	1	YE40304003000	
6		Excitation release	CHINT	MX	220V 50/60Hz	2	YE40023560000	
7	K1	Contactor	SIEMENS	3RT6027-1AN21	32A 220V 50/60Hz	1	YE00602722000	
8	K2	Contactor	SIEMENS	3RT6016-1AN21	9A 220V 50/60Hz	1	YE00601621000	
9	K3 K5	Contactor	SIEMENS	3RT6028-1AN21	38A 220V 50/60Hz	2	YE00602822000	
10	K4	Contactor	SIEMENS	3RT6028-1AN21	38A 220V 50/60Hz	1	YE00602822000	
11	K8 K9	Relay	WEIDMULLER	DRM270730LT	220V 50/60Hz	2	YE03270700000	
12	F1	Overload relay	SIEMENS	3RU6126-4NB0	23-28A	1	YE01612620000	
13	F2	Overload relay	SIEMENS	3RU6116-1HB0	5.5-8A	1	YE01160550000	
14	PCB	Controller	PUMP	K.SF878500A.03	-----	1	YE80878500100	
15	U	DC power	MEAN WELL	ESA-35-24	OUT=DC24V 1.5A	1	YE71352400100	
16	FU1	Fuse base	CHINT	RT28-32	2P	1	YE41032200000	
17		Fuse	CHINT	10×38 500V	2A	2	YE46002000100	
18	H1	Buzzer	HITPOINT	PK-35A	220VAC	1	YE84003500200	
19	S1	Dew-point transducer	CS	CS 217-OEM	POWER=24VDC OUT=4-20mA	1	YE90021700100	(1)(2)
20	S2	Micro switch	TEND	YBLXW-5/11G2	250V 5(4)A	1	----	(1)
21	S3	Temperature protector	EGO	---	115-320 °C	1	----	(1)
22	S4	Temperature protector	EGO	---	115-320 °C	1	----	(1)
23	S5 S6 S7	Thermocouple	SHINI	ST-K	K	3	----	(1)
24	X1	Terminal board	HOLLEYWELL	70mm²PE	-	1	YE61070000000	
25		Terminal board	HOLLEYWELL	6mm²	-	12	YE60000603200	

整机版本Ver.D

Notes: (1)Means it's not the material inside the control box. (2)Stands for optional dew-point monitor

Mark	Before modification	After modification	Modified by	Modify date

Drawer		Version	E
Designer		Approved by	
Proofread by			
Checked by		Date	20170929

Title: SDD-900U/700H
Electrical Components List 1

Drawing NO.: SDD-900U/700H-CE-230V-E-5

信易電熱機械股份有限公司
Shini Plastics Technologies, Inc.

Scale		Page	5
Standard	CE	Totally	6 Pages
Voltage	230V		
Frequency	50Hz		

NO.	Symbol	Name	Manufacturer	Type	Specification	Number	Material number	Remark
26		Terminal board	HOLLEYWELL	6mm²PE	-	3	YE60000603500	
27		Terminal board	HOLLEYWELL	4mm²	-	3	YE60000403200	
28		Terminal board	HOLLEYWELL	4mm²PE	-	1	YE60000403500	
29		Terminal board	HOLLEYWELL	2.5mm²	-	8	YE60002503200	
30		Terminal board	HOLLEYWELL	2.5mm²PE	-	1	YE60002503400	
31		Terminal board	HOLLEYWELL	2.5mm²	-	2	YE60002503200	(2)
32	X2	Terminal board	HOLLEYWELL	2.5mm²	-	4	YE60002503200	
33		Terminal board	HOLLEYWELL	2.5mm²PE	-	1	YE60002503400	
34	FM	Fan	SUNON	DP-200A	230VAC 40W	1	-----	(1)
35	M1	Blower	SHINI	-----	230V 7.5kW	1	-----	(1)
36	M2	Blower	SHINI	-----	230V 1.5kW	1	-----	(1)
37	M3	Motor	----	-----	230V 0.015kW	1	-----	(1)
38	EH1	Pipe heater	SHINI	-----	230V 24kW	1	-----	(1)
39	EH2	Pipe heater	SHINI	-----	230V 10kW	1	-----	(1)
40	S10	Communication interface board RS-485 (double Dsub-9pin connector)	--	--	--	1	YE90048501200	
41		Shell RS485(SAL-700G-A-19)0	--	--	--	1	YR40048500000	
42		Terminal block E/GKseries(honeywell)			PCS	5	YE60000003900	

整机版本Ver.D

Notes: (1)Means it's not the material inside the control box. (2)Stands for optional dew-point monitor

Drawer		Version	E	Title	SDD-900U/700H Electrical Components List 2	Drawing NO.	SDD-900U/700H-CE-230V-E-6	Scale /
Designer		Approved by						Standard CE
Proofread by								Voltage 230V
Checked by		Date	20170929					Frequency 50Hz

Mark	Before modification	After modification	Modified by	Modify date

信易電熱機械股份有限公司
Shini Plastics Technologies, Inc.

Page 6 Totally 6 Pages

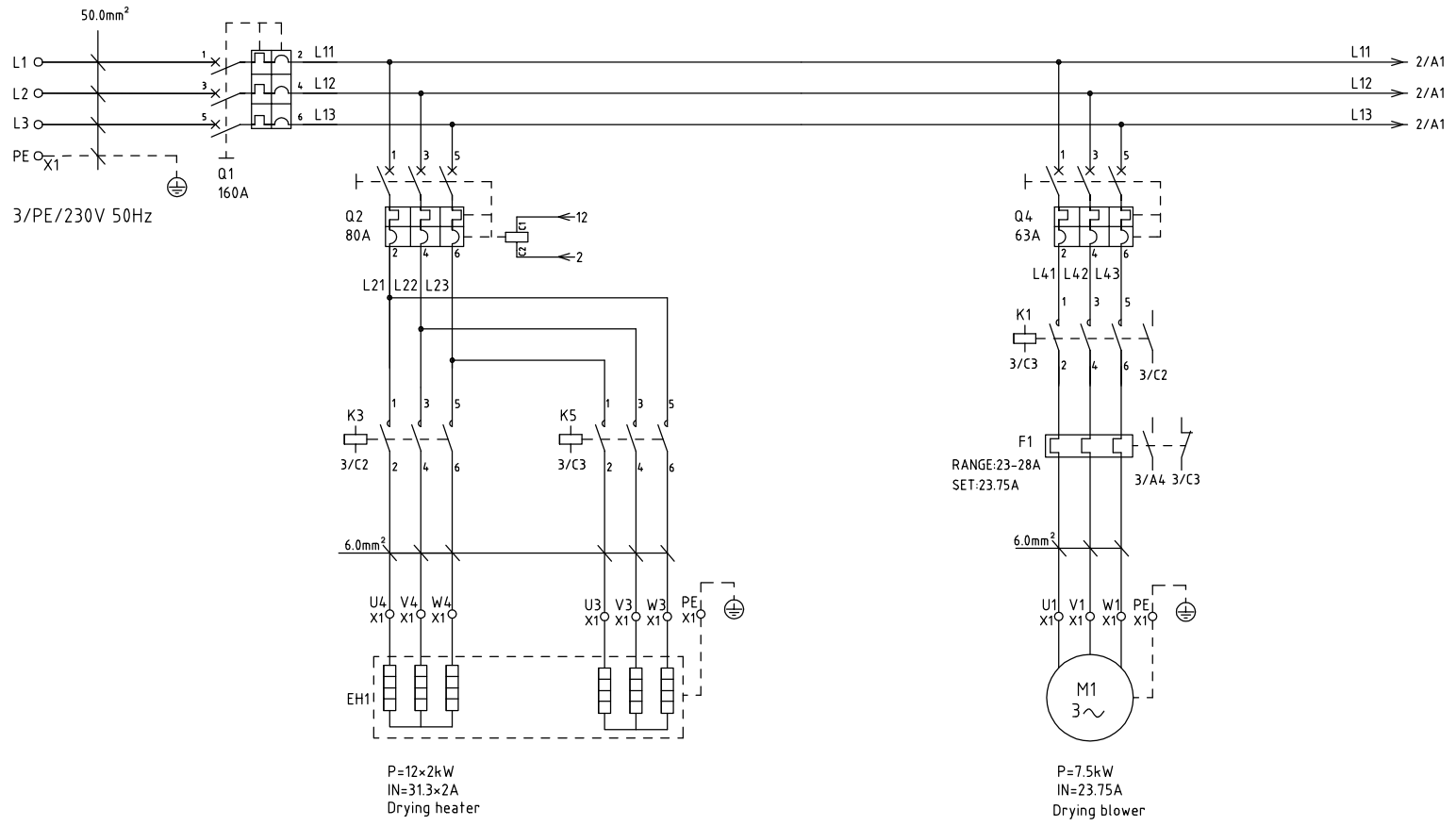

整机版本Ver.F

					Drawer		Version	E	Title: SDD-1200U/700H Main Circuit Diagram 1	Drawing NO.: SDD-1200U/700H-CE-230V-E-1	Scale	Page 1
					Designer		Approved by				Standard CE	Totally 6 Pages
					Proofread by				SHINI 信易電熱機械股份有限公司 Shini Plastics Technologies, Inc.		Voltage	230V
Mark	Before modification	After modification	Modified by	Modify date	Checked by		Date	20170929			Frequency	50Hz

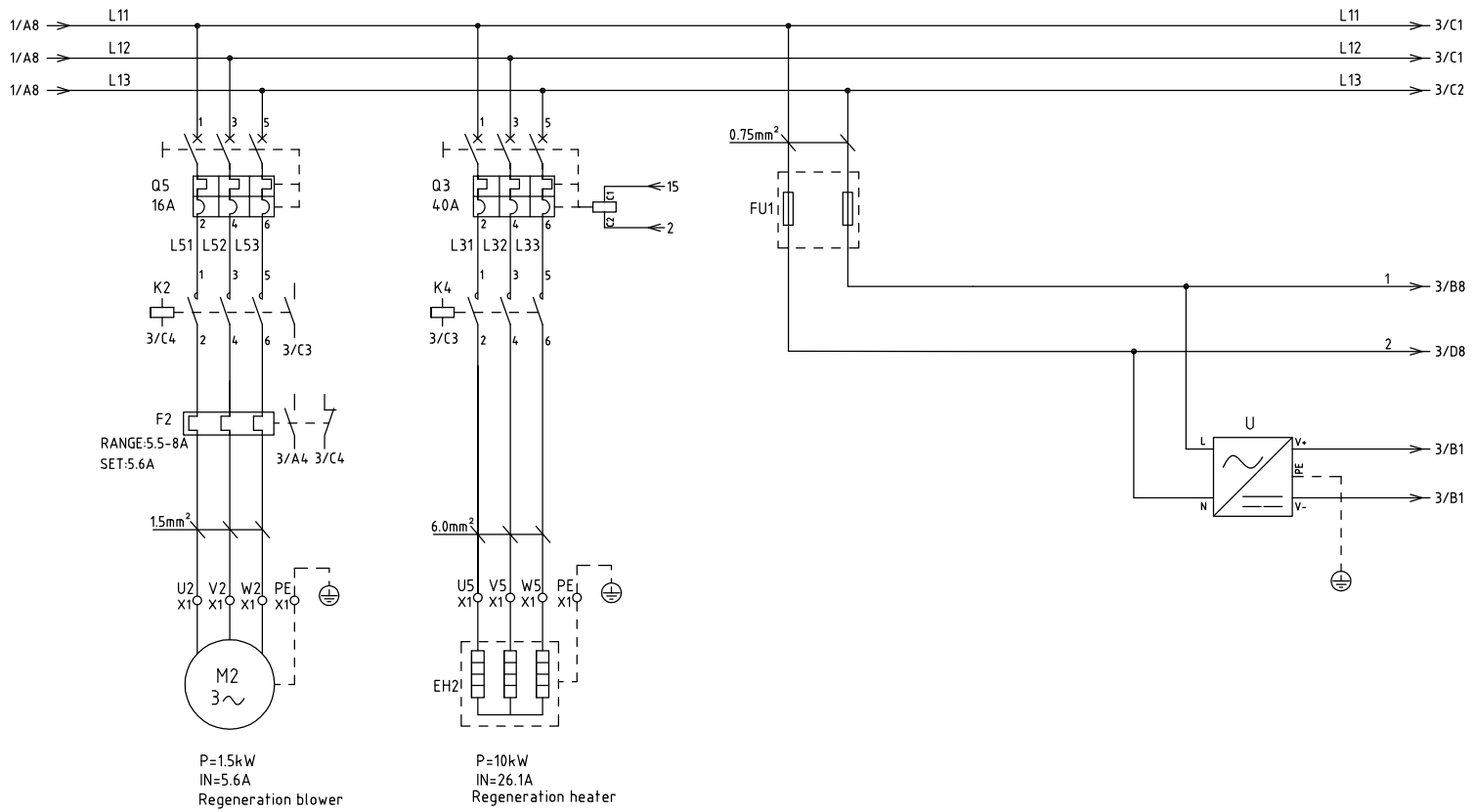

整机版本Ver.F

					Drawer		Version	E	Title: SDD-1200U/700H Main Circuit Diagram 2	Drawing NO. SDD-1200U/700H-CE-230V-E-2	Scale		Page 2
					Designer		Approved by				Standard	CE	Totally 6 Pages
					Proofread by				信易電熱機械股份有限公司 Shini Plastics Technologies, Inc.		Voltage	230V	
Mark	Before modification	After modification	Modified by	Modify date	Checked by		Date	20170929			Frequency	50Hz	

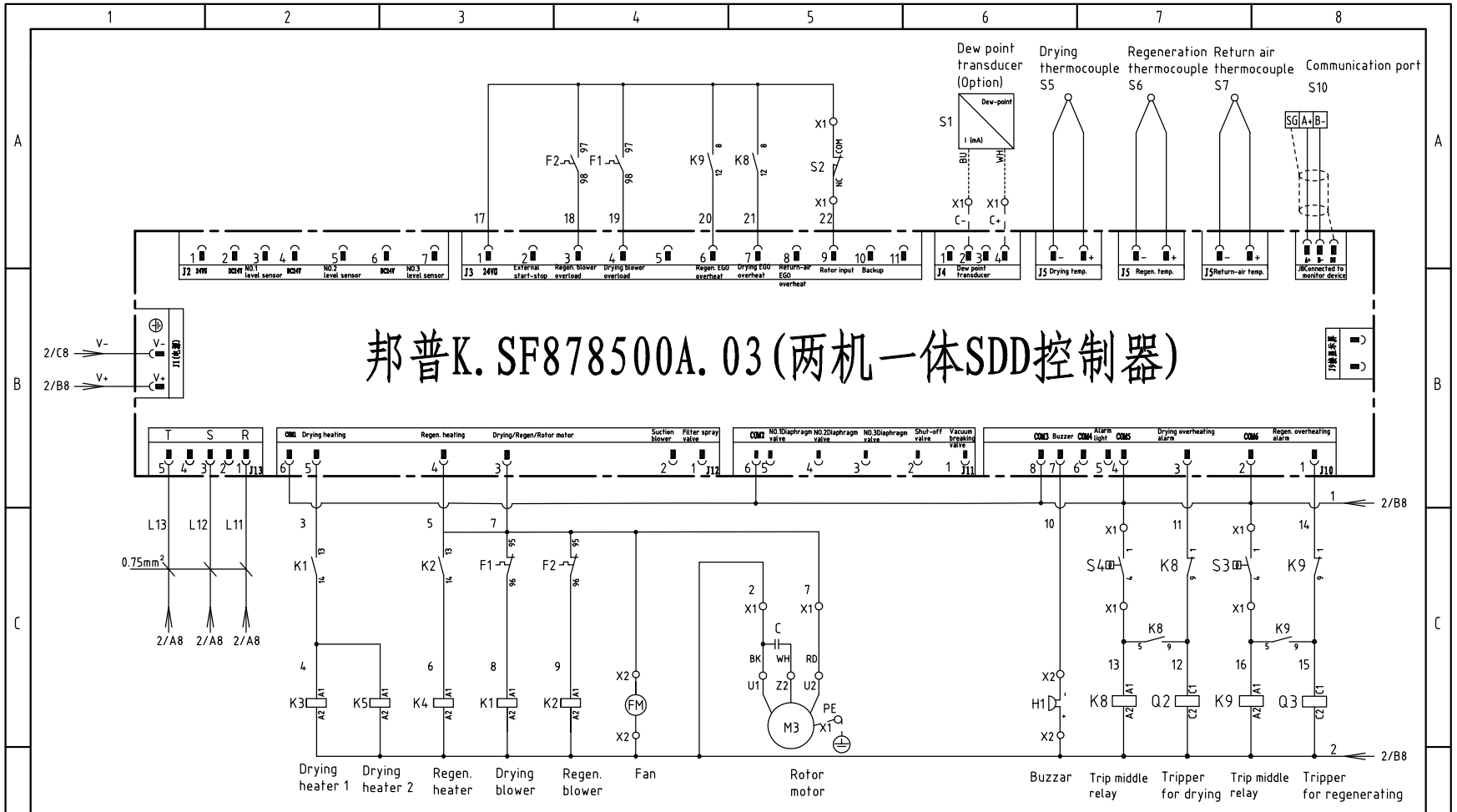

整机版本Ver.F

					Drawer		Version	E	Title	SDD-1200U/700H	Drawing NO.	Scale	Page 3
					Designer		Approved by			Control Circuit Diagram	SDD-1200U/700H-CE-230V-E-3	Standard CE	Totally 6 Pages
					Proofread by							Voltage	230V
Mark	Before modification	After modification	Modified by	Modify date	Checked by		Date	20170929				Frequency	50Hz

信易電熱機械股份有限公司
Shini Plastics Technologies, Inc.

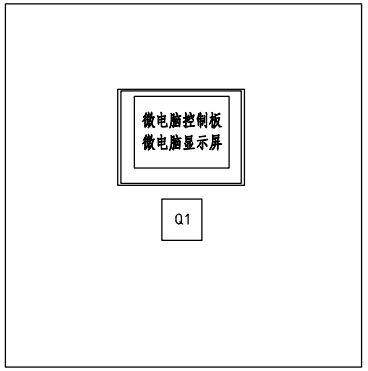

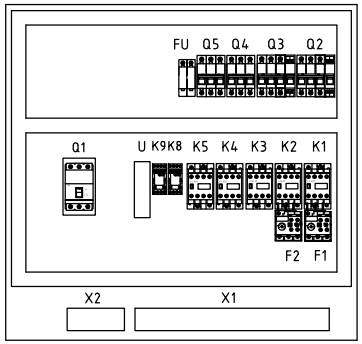

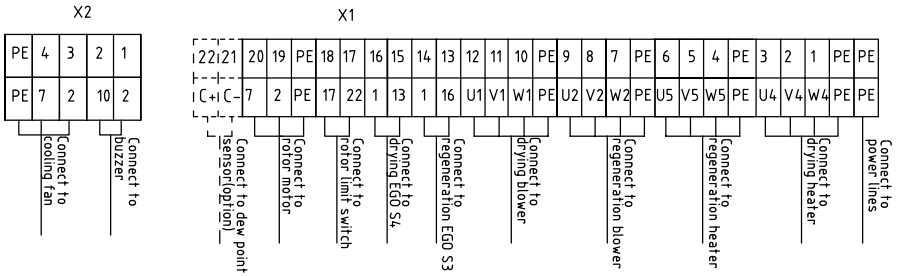

整机版本Ver.F

					Drawer		Version	E	Title: SDD-1200U/700H Electrical Components Layout	Drawing NO. SDD-1200U/700H-CE-230V-E-4	Scale	Page 4
					Designer		Approved by				Standard CE	Totally 6 Pages
					Proofread by				SHINI 信易電熱機械股份有限公司 Shini Plastics Technologies, Inc.		Voltage	230V
Mark	Before modification	After modification	Modified by	Modify date	Checked by		Date	20170929			Frequency	50Hz

NO.	Symbol	Name	Manufacturer	Type	Specification	Number	Material number	Remark
1	Q1	Breaker interlock	ABB	A2B250TMF160	160A	1	YE41161500000	
2	Q4	Circuit-breaker	TECO	BM-63C/3063S 3P	63A	1	YE40306303000	
3	Q5	Circuit-breaker	TECO	BM-63C/3016S 3P	16A	1	YE40301603000	
4	Q2	Circuit-breaker	TECO	BM-100D/3080S 3P	80A	1	YE40308003000	
5	Q3	Circuit-breaker	TECO	BM-63C/3040S 3P	40A	1	YE40304003000	
6		Excitation release	CHINT	MX	220V 50/60Hz	2	YE40023560000	
7	K1	Contactor	SIEMENS	3RT6027-1AN21	32A 220V 50/60Hz	1	YE00602722000	
8	K2	Contactor	SIEMENS	3RT6016-1AN21	9A 220V 50/60Hz	1	YE00601621000	
9	K3 K5	Contactor	SIEMENS	3RT6028-1AN21	38A 220V 50/60Hz	2	YE00602822000	
10	K4	Contactor	SIEMENS	3RT6028-1AN21	38A 220V 50/60Hz	1	YE00602822000	
11	K8 K9	Relay	WEIDMULLER	DRM270730LT	220V 50/60Hz	2	YE03270700000	
12	F1	Overload relay	SIEMENS	3RU6126-4NB0	23-28A	1	YE01612620000	
13	F2	Overload relay	SIEMENS	3RU6116-1HB0	5.5-8A	1	YE01160550000	
14	PCB	Controller	PUMP	K.SF878500A.03	-----	1	YE80878500100	
15	U	DC power	MEAN WELL	ESA-35-24	OUT=DC24V 1.5A	1	YE71352400100	
16	FU1	Fuse base	CHINT	RT28-32	2P	1	YE41032200000	
17		Fuse	CHINT	10×38 500V	2A	2	YE46002000100	
18	H1	Buzzer	HITPOINT	PK-35A	220VAC	1	YE84003500200	
19	S1	Dew-point transducer	CS	CS 217-OEM	POWER=24VDC OUT=4-20mA	1	YE90021700100	(1)(2)
20	S2	Micro switch	TEND	YBLXW-5/11G2	250V 5(4)A	1	----	(1)
21	S3	Temperature protector	EGO	---	115-320 °C	1	----	(1)
22	S4	Temperature protector	EGO	---	115-320 °C	1	----	(1)
23	S5 S6 S7	Thermocouple	SHINI	ST-K	K	3	----	(1)
24	X1	Terminal board	HOLLEYWELL	70mm²PE	-	1	YE61070000000	
25		Terminal board	HOLLEYWELL	6mm²	-	12	YE60000603200	

整机版本Ver.F

Notes: (1)Means it's not the material inside the control box. (2)Stands for optional dew-point monitor

Mark	Before modification	After modification	Modified by	Modify date

Drawer		Version	E
Designer		Approved by	
Proofread by			
Checked by		Date	20170929

Title: SDD-1200U/700H Electrical Components List 1

Drawing NO.: SDD-1200U/700H-CE-230V-E-5

信易電熱機械股份有限公司
Shini Plastics Technologies, Inc.

Scale		Page	5
Standard	CE	Totally	6 Pages
Voltage	230V		
Frequency	50Hz		

NO.	Symbol	Name	Manufacturer	Type	Specification	Number	Material number	Remark
26		Terminal board	HOLLEYWELL	6mm²PE	-	3	YE60000603500	
27		Terminal board	HOLLEYWELL	4mm²	-	3	YE60000403200	
28		Terminal board	HOLLEYWELL	4mm²PE	-	1	YE60000403500	
29		Terminal board	HOLLEYWELL	2.5mm²	-	8	YE60002503200	
30		Terminal board	HOLLEYWELL	2.5mm²PE	-	1	YE60002503400	
31		Terminal board	HOLLEYWELL	2.5mm²	-	2	YE60002503200	(2)
32	X2	Terminal board	HOLLEYWELL	2.5mm²	-	4	YE60002503200	
33		Terminal board	HOLLEYWELL	2.5mm²PE	-	1	YE60002503400	
34	FM	Fan	SUNON	DP-200A	230VAC 40W	1	-----	(1)
35	M1	Blower	SHINI	-----	230V 7.5kW	1	-----	(1)
36	M2	Blower	SHINI	-----	230V 1.5kW	1	-----	(1)
37	M3	Motor	----	-----	230V 0.015kW	1	-----	(1)
38	EH1	Pipe heater	SHINI	-----	230V 24kW	1	-----	(1)
39	EH2	Pipe heater	SHINI	-----	230V 10kW	1	-----	(1)
40	S10	Communication interface board RS-485 (double Dsub-9pin connector)	--	--	--	1	YE90048501200	
41		Shell RS485(SAL-700G-A-19)0	--	--	--	1	YR40048500000	
42		Terminal block E/GKseries(honeywell)			PCS	5	YE60000003900	

整机版本Ver.F

Notes: (1)Means it's not the material inside the control box. (2)Stands for optional dew-point monitor

Mark	Before modification	After modification	Modified by	Modify date

Drawer		Version	E
Designer		Approved by	
Proofread by			
Checked by		Date	20170929

Title: SDD-1200U/700H
Electrical Components List 2

Drawing NO.: SDD-1200U/700H-CE-230V-E-6

SHINI 信易電熱機械股份有限公司 Shini Plastics Technologies, Inc.

Scale		Page	6
Standard	CE	Totally	6 Pages
Voltage	230V		
Frequency	50Hz		