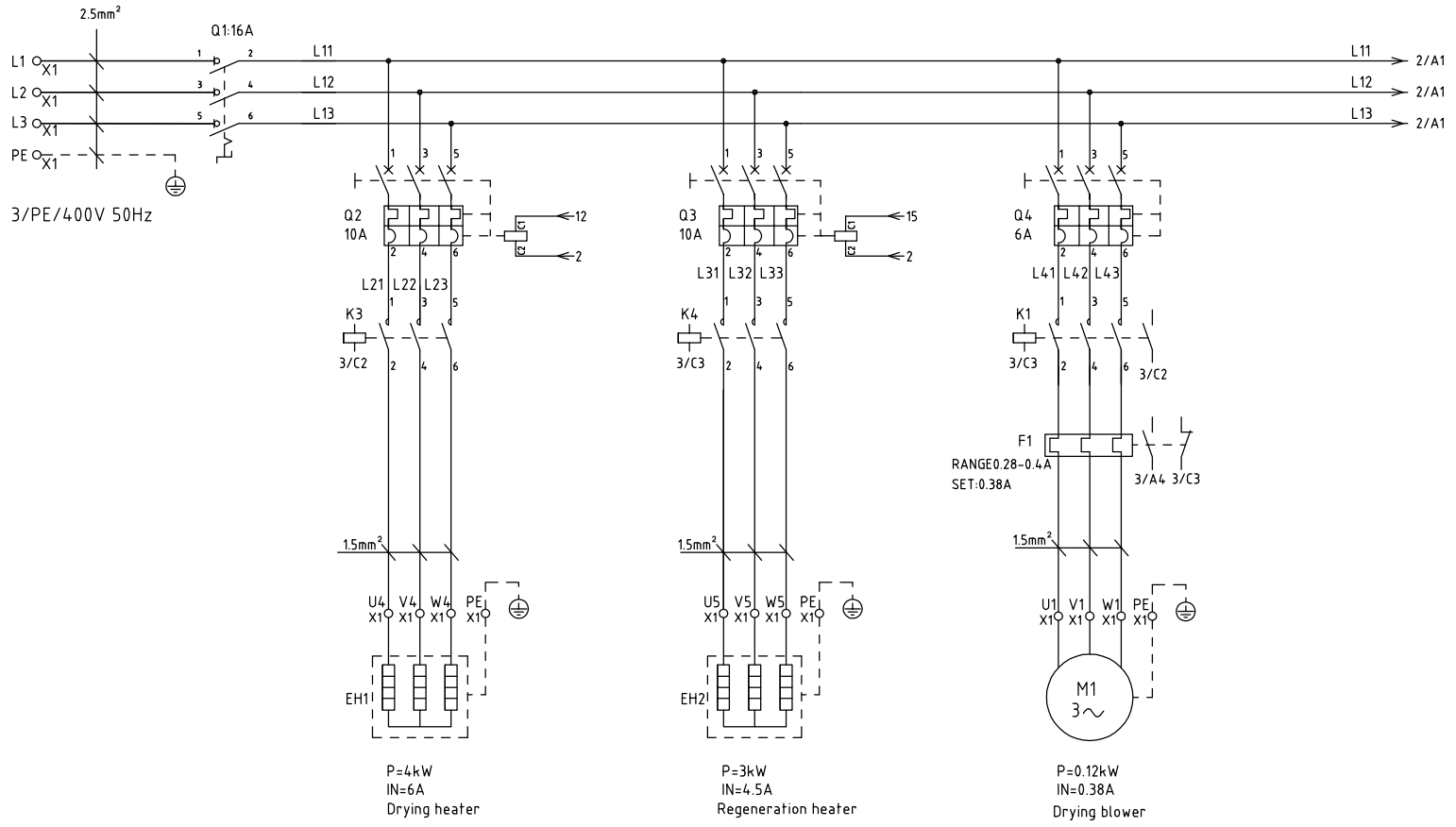

整机版本Ver.E

					Drawer		Version	H	Title: SDD-40U(80U)/40H Main Circuit Diagram 1	Drawing NO.: SDD-40U(80U)/40H-CE-400V-H-1	Scale	Page 1
					Designer		Approved by				Standard CE	Totally 6 Pages
					Proofread by				信易電熱機械股份有限公司 Shini Plastics Technologies, Inc.		Voltage	400V
Mark	Before modification	After modification	Modified by	Modify date	Checked by		Date	20171023			Frequency	50Hz

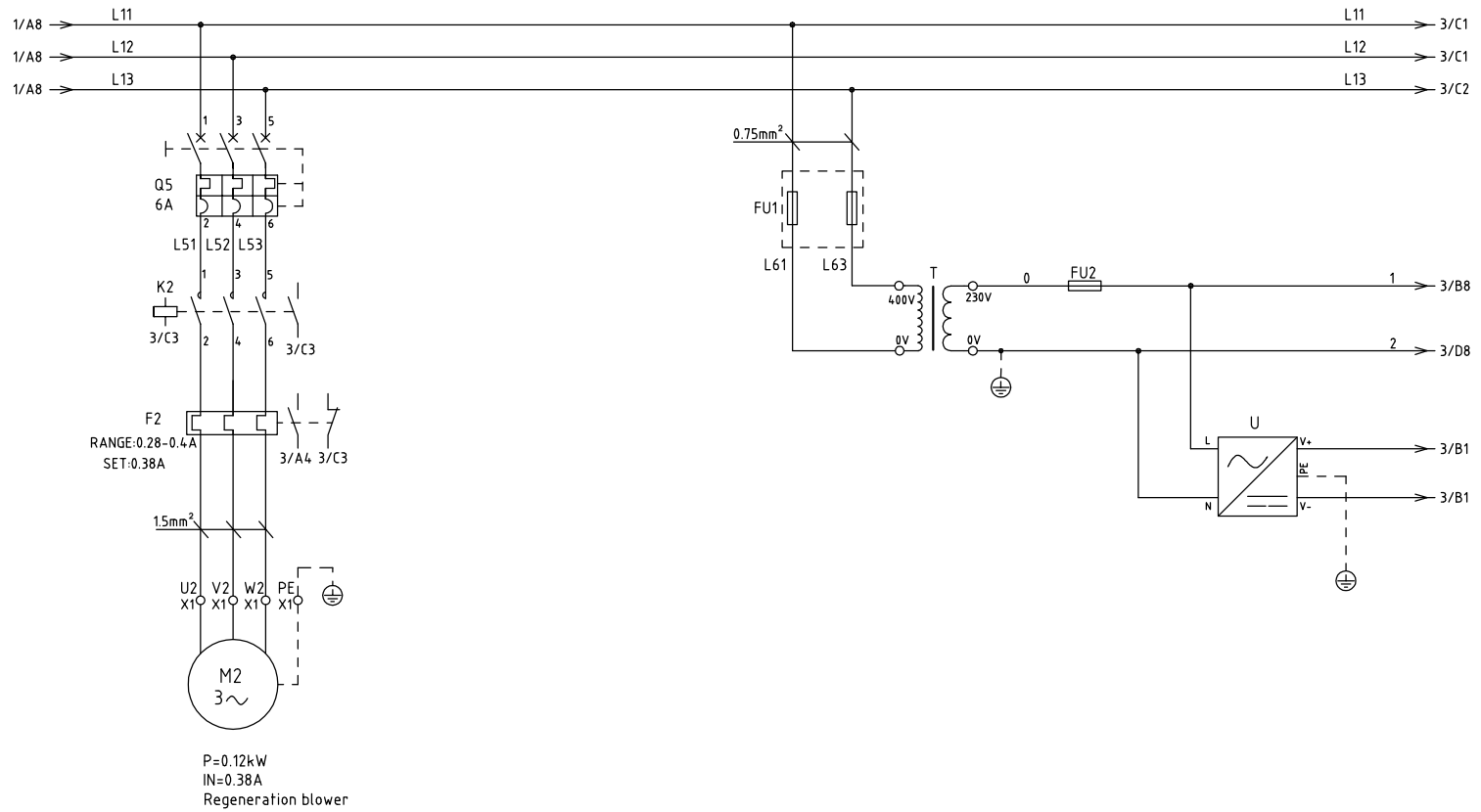

整机版本Ver.E

					Drawer		Version	H	Title SDD-40U(80U)/40H Main Circuit Diagram 2	Drawing NO. SDD-40U(80U)/40H-CE-400V-H-2	Scale		Page 2
					Designer		Approved by				Standard	CE	Totally 6 Pages
					Proofread by				信易電熱機械股份有限公司 Shini Plastics Technologies, Inc.		Voltage	400V	
Mark	Before modification	After modification	Modified by	Modify date	Checked by		Date	20171023			Frequency	50Hz	

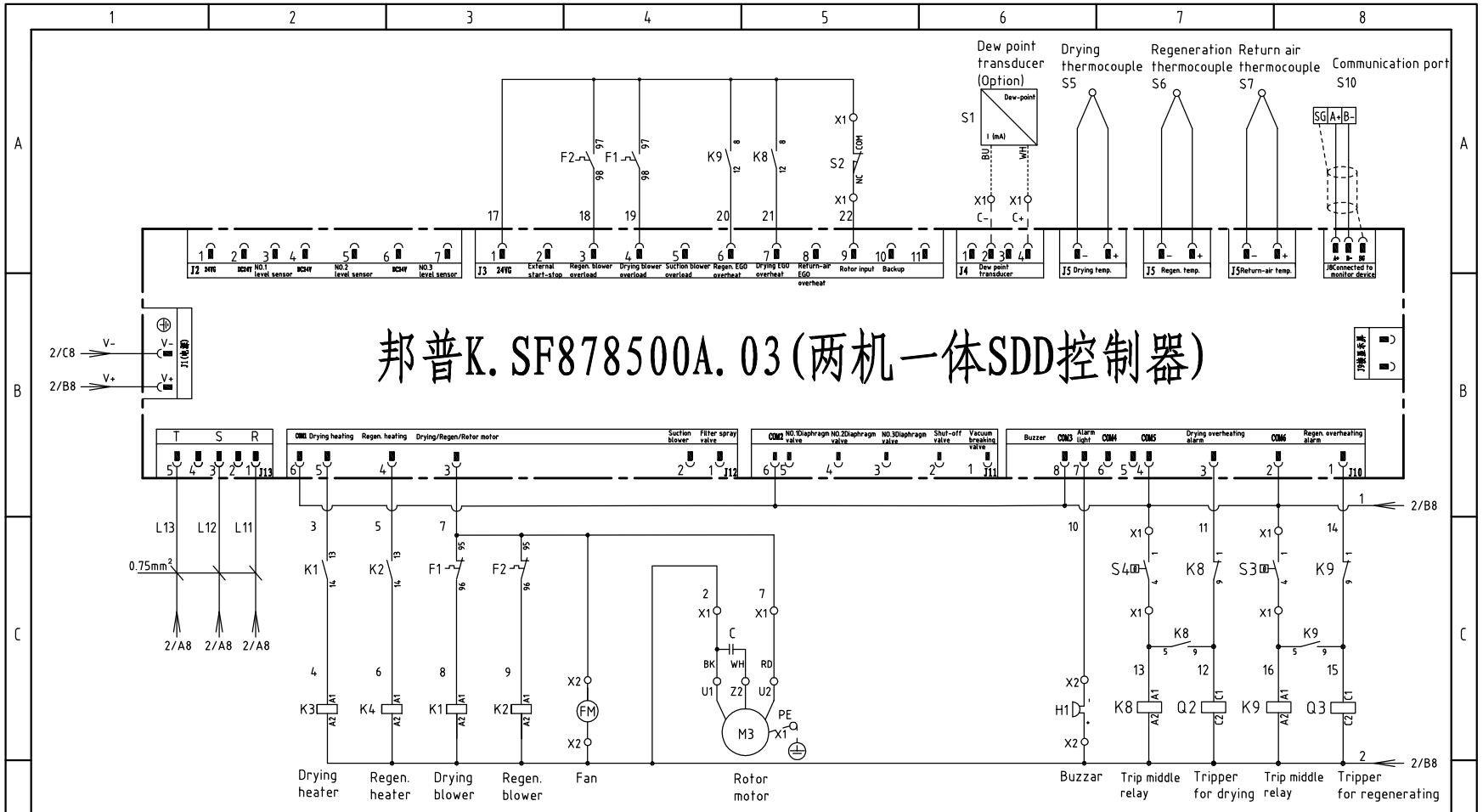

整机版本Ver.E

					Drawer		Version	H	Title SDD-40U(80U)/40H Control Circuit Diagram	Drawing NO. SDD-40U(80U)/40H-CE-400V-H-3	Scale	Page 3
					Designer		Approved by				Standard CE	Totally 6 Pages
					Proofread by				信易電熱機械股份有限公司 Shini Plastics Technologies, Inc.		Voltage	400V
Mark	Before modification	After modification	Modified by	Modify date	Checked by		Date	20171023			Frequency	50Hz

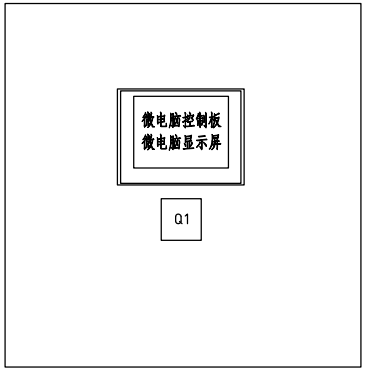

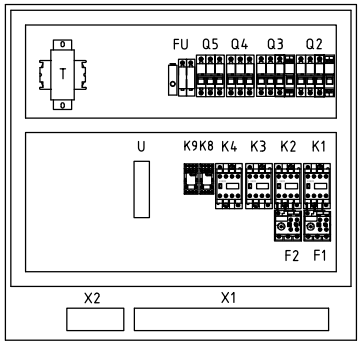

X2

PE	4	3	2	1
PE	7	2	10	2
	Connect to cooling fan		Connect to buzzer	

X1

36	35	26	25	PE	24	23	22	21	20	19	18	17	16	PE	15	14	13	PE	9	8	7	PE	6	5	4	PE	3	2	1	PE
C+	C-	7	2	PE	17	22	1	13	1	16	U1	V1	W1	PE	U2	V2	W2	PE	U5	V5	W5	PE	U4	V4	W4	PE	L1	L2	L3	PE
	Connect to dew point sensor(option)		Connect to rotor motor			Connect to rotor limit switch		Connect to drying EGO S4		Connect to regeneration EGO S3			Connect to drying blower				Connect to regeneration blower				Connect to regeneration heater				Connect to drying heater				Connect to power lines	

整机版本Ver.E

					Drawer		Version	H	Title SDD-40U(80U)/40H Electrical Components Layout	Drawing NO. SDD-40U(80U)/40H-CE-400V-H-4	Scale		Page 4
					Designer		Approved by				Standard	CE	Totally 6 Pages
					Proofread by				信易電熱機械股份有限公司 Shini Plastics Technologies, Inc.		Voltage	400V	
Mark	Before modification	After modification	Modified by	Modify date	Checked by		Date	20171023			Frequency	50Hz	

NO.	Symbol	Name	Manufacturer	Type	Specification	Number	Material number	Remark
1	Q1	Main switch	EATON	TO-2-1/EA/SVB	16A	1	YE10021160000	
2	Q2 Q3	Circuit-breaker	TECO	BM-63C/3010S	10A	2	YE40301003000	
3		Excitation release	TECO	MX	230V 50/60Hz	2	YE40023560000	
4	Q4 Q5	Circuit-breaker	TECO	BM-63C/3006S	6A	2	YE40300603000	
5	K1	Contactor	SIEMENS	3RT6015-1AN21	7A 1NO 220V 50/60HZ	1	YE00601521000	
6	K2	Contactor	SIEMENS	3RT6015-1AN21	7A 1NO 220V 50/60HZ	1	YE00601521000	
7	K3	Contactor	SIEMENS	3RT6016-1AN21	9A 1NO 220V 50/60HZ	1	YE00601621000	
8	K4	Contactor	SIEMENS	3RT6016-1AN21	9A 1NO 220V 50/60HZ	1	YE00601621000	
9	K8 K9	Relay	WEIDMULLER	DRM270730LT	220V 50/60Hz	2	YE03270700000	
10	F1	Overload relay	SIEMENS	3RU6116-0EB0	0.28-0.4A	1	YE01161280000	
11	F2	Overload relay	SIEMENS	3RU6116-0EB0	0.28-0.4A	1	YE01161280000	
12	PCB	Controller	PUMP	K.SF878500A.03	230V 50/60Hz	1	YE80878500100	
13	U	DC power	MEAN WELL	ESA-35-24	OUT=DC24V 1.5A	1	YE71352400100	
14	FU1	Fuse base	CHINT	RT28-32	2P/32A/500V/10×38	1	YE41032200000	
15		Fuse	CHINT	10×38 500V	2A/gG型	2	YE46002000100	
16	FU2	Fuse base+ Glass tube	YINDA	FS-10	2A	1	YE41001000000	
17	T	Transformer	--	--	IN=400V OUT=230V 500mA	1	YE70402300800	
18	H1	Buzzer	HITPOINT	PK-35A	220V AC/DC	1	YE84003500200	
19	S1	Dew-point transducer	CS	CS 217-OEM	POWER=24VDC OUT=4-20mA	1	YE90021700100	(2)
20	S2	Micro switch	TEND	YBLXW-5/11G2	250V 5(4)A	1	---------	(1)
21	S3 S4	Temperature protector	EGO	---	115-320 °C	2	---------	(1)
22	S5 S6	Thermocouple	SHINI	ST-K	K	2	---------	(1)
23	X1	Terminal board	HOLLEYWELL	4.0mm²	-	15	YE60000403200	
24		Terminal board	HOLLEYWELL	4.0mm²PE	-	5	YE60000403500	
25		Terminal board	HOLLEYWELL	2.5mm²	-	8	YE60002503200	

整机版本Ver.E Notes: (1)Means it's not the material inside the control box. (2)Stands for optional dew-point monitor

Mark	Before modification	After modification	Modified by	Modify date

Drawer		Version	H
Designer		Approved by	
Proofread by			
Checked by		Date	20171023

Title: SDD-40U(80U)/40H Electrical Components List 1

Drawing NO.: SDD-40U(80U)/40H-CE-400V-H-5

信易電熱機械股份有限公司 Shini Plastics Technologies, Inc.

Scale	
Standard	CE
Page	5
Totally	6 Pages
Voltage	400V
Frequency	50Hz

NO.	Symbol	Name	Manufacturer	Type	Specification	Number	Material number	Remark
26		Terminal board	HOLLEYWELL	2.5mm²PE	-	1	YE60002503400	
27		Terminal board	HOLLEYWELL	2.5mm²	-	2	YE60002503200	(2)
28	X2	Terminal board	HOLLEYWELL	2.5mm²	-	4	YE60002503200	
29		Terminal board	HOLLEYWELL	2.5mm²PE	-	1	YE60002503400	
30	FM	Fan	----	12×12CM	230V/50/60HZ 40W	1	-----	(1)
31	M1	Blower 4"	SHINI	-----	0.12kW 380V-460V 50/60HZ	1	-----	(1)
32	M2	Blower 2.5"	SHINI	-----	0.12kW 380V-460V 50/60HZ	1	-----	(1)
33	M3	Motor	東歷	3IK15GN-C-T/3GN-10XK/3GN	-120K 220V 0.015kW	1	-----	(1)
34	EH1	Pipe heater	SHINI	SD-40H-D-03~04(0版)	4kW/400V	1	-----	(1)
35	EH2	Pipe heater	SHINI	SD-40H-C-07~08(A版)	3kW/400V	1	-----	(1)
36		Terminal block E/GKseries(honeywell)	-----	-----	-----	4	YE60000003900	

整机版本Ver.E

Notes: (1)Means it's not the material inside the control box. (2)Stands for optional dew-point monitor

Mark	Before modification	After modification	Modified by	Modify date

Drawer		Version	H
Designer		Approved by	
Proofread by			
Checked by		Date	20171023

Title: SDD-40U(80U)/40H
Electrical Components List 2

Drawing NO.: SDD-40U(80U)/40H-CE-400V-H-6

信易電熱機械股份有限公司
Shini Plastics Technologies, Inc.

Scale		Page	6
Standard	CE	Totally	6 Pages
Voltage	400V		
Frequency	50Hz		

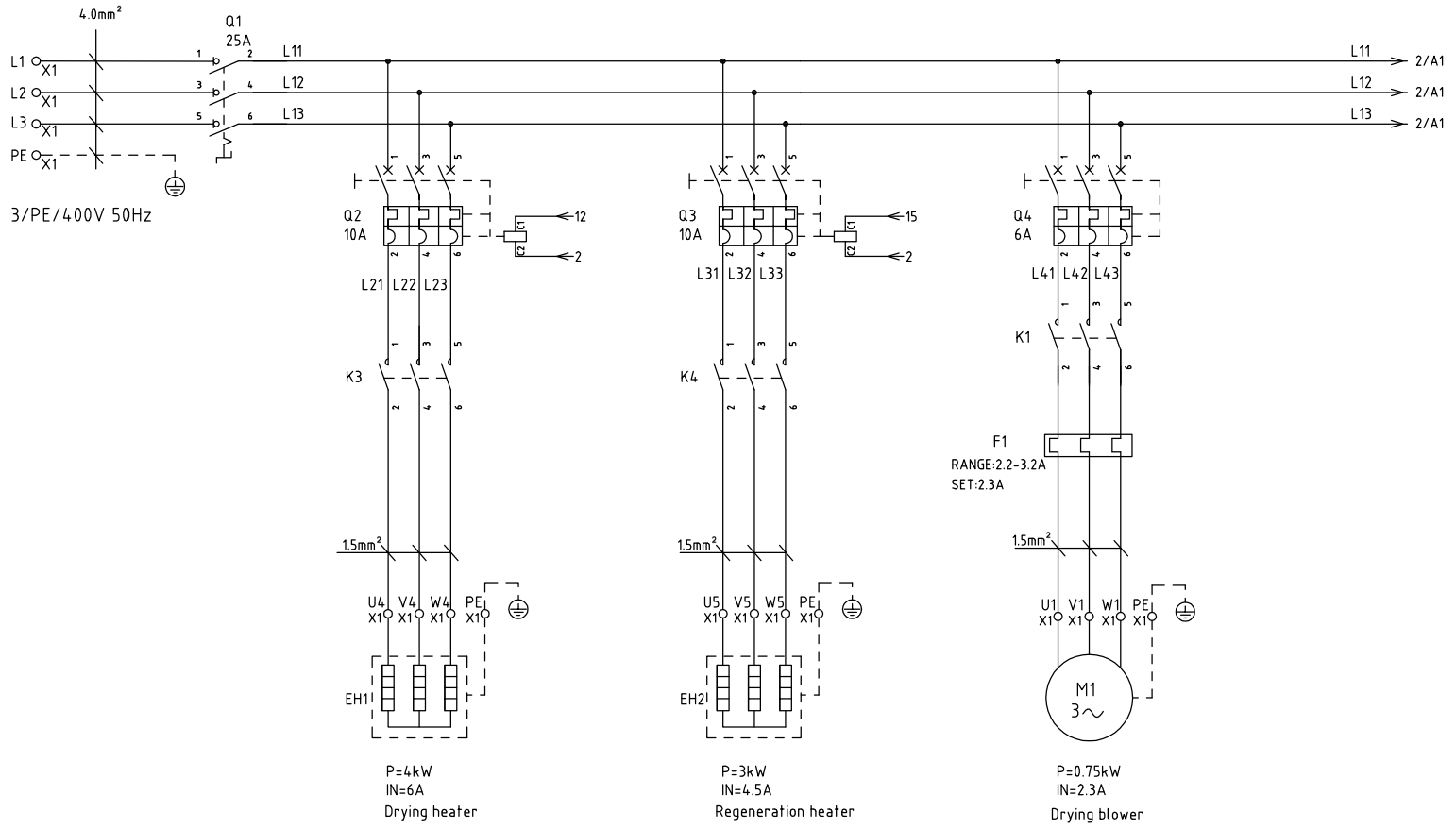

整机版本Ver.D

					Drawer		Version	H	Title SDD-120U(160U)/80H Main Circuit Diagram 1	Drawing NO. SDD-120U(160U)/80H-CE-400V-H-1	Scale	Page 1
					Designer		Approved by				Standard CE	Totally 6 Pages
					Proofread by				信易電熱機械股份有限公司 Shini Plastics Technologies, Inc.		Voltage	400V
Mark	Before modification	After modification	Modified by	Modify date	Checked by		Date	20180830			Frequency	50Hz

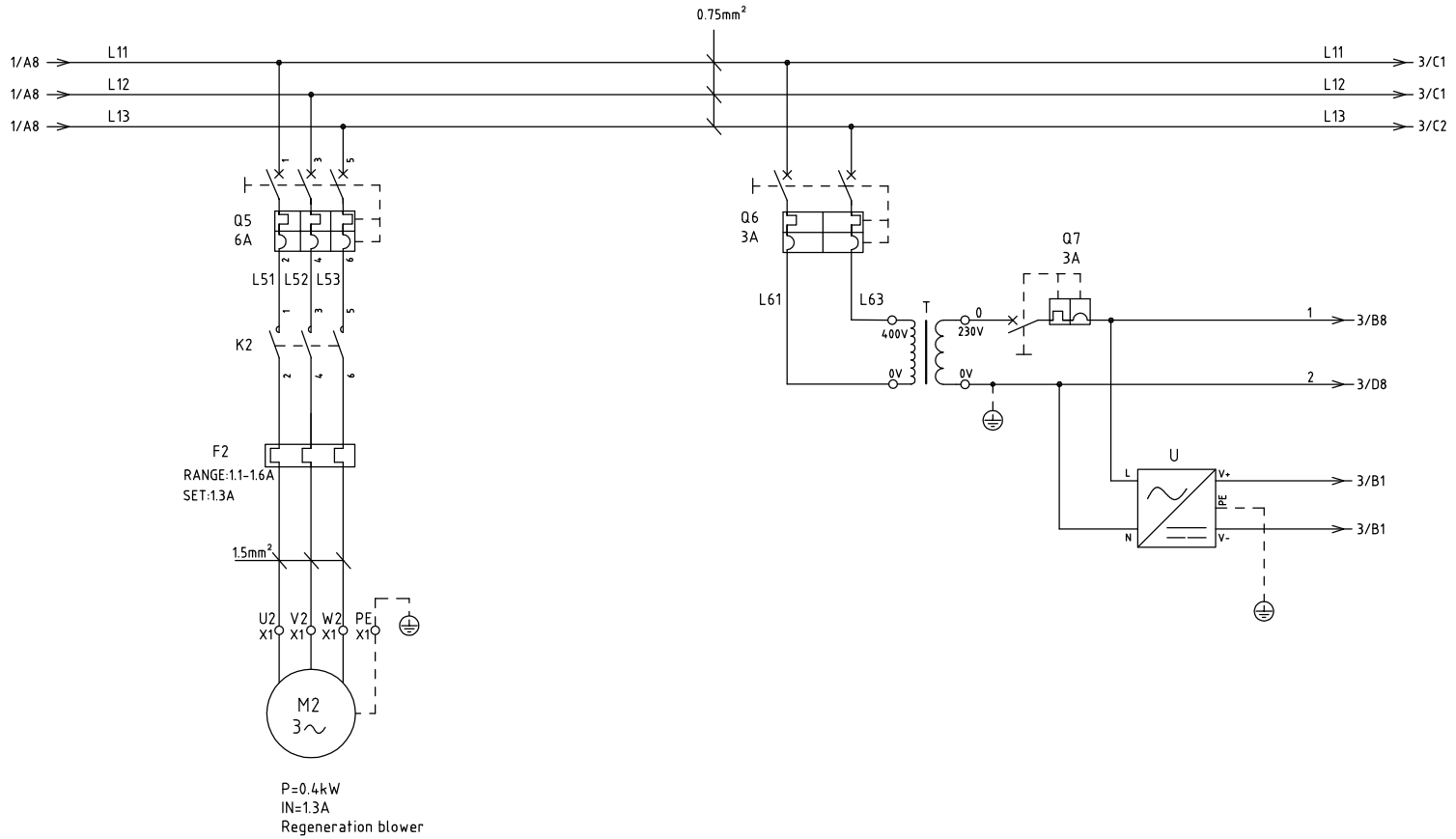

整机版本Ver.D

					Drawer		Version	H	Title SDD-120U(160U)/80H Main Circuit Diagram 2	Drawing NO. SDD-120U(160U)/80H-CE-400V-H-2	Scale		Page 2
					Designer		Approved by				Standard	CE	Totally 6 Pages
					Proofread by				信易電熱機械股份有限公司 Shini Plastics Technologies, Inc.		Voltage	400V	
Mark	Before modification	After modification	Modified by	Modify date	Checked by		Date	20180830			Frequency	50Hz	

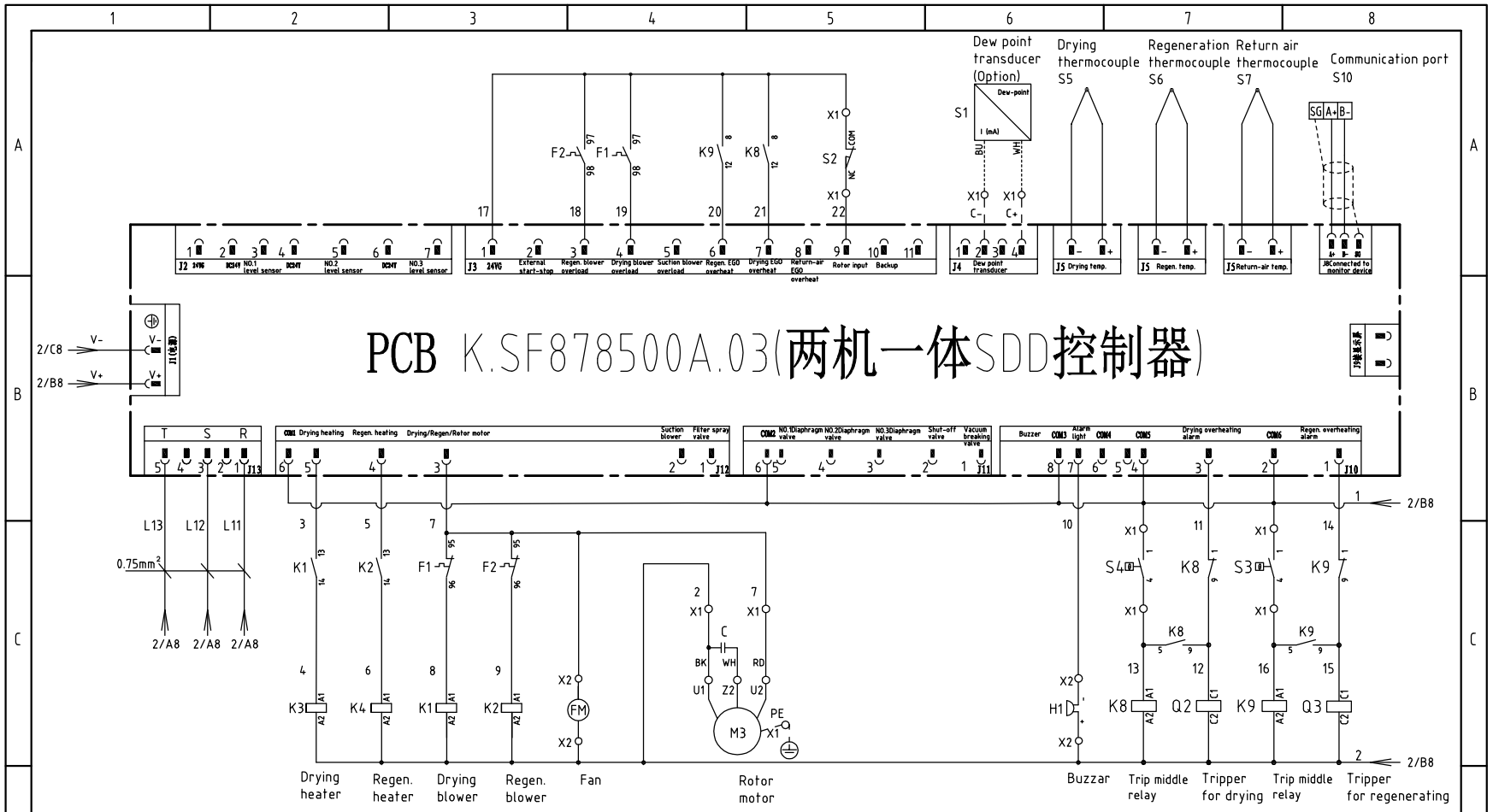

整机版本Ver.D

					Drawer		Version	H	Title SDD-120U(160U)/80H Control Circuit Diagram	Drawing NO. SDD-120U(160U)/80H-CE-400V-H-3	Scale	Page 3
					Designer		Approved by				Standard CE	Totally 6 Pages
					Proofread by				信易電熱機械股份有限公司 Shini Plastics Technologies, Inc.		Voltage	400V
Mark	Before modification	After modification	Modified by	Modify date	Checked by		Date	20180830			Frequency	50Hz

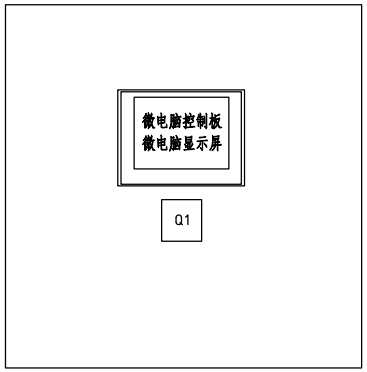

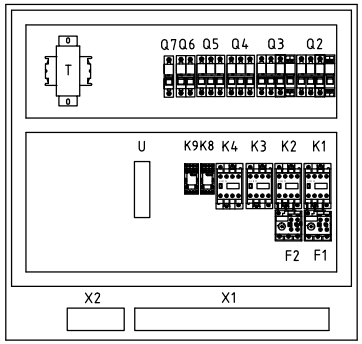

X2

PE	4	3	2	1
PE	7	2	10	2

Connect to cooling fan
Connect to buzzer

X1

25	24	23	22	PE	21	20	19	18	17	16	15	14	13	PE	12	11	10	PE	9	8	7	PE	6	5	4	PE	3	2	1	PE
C+	C-	7	2	PE	17	22	1	13	1	16	U1	V1	W1	PE	U2	V2	W2	PE	U5	V5	W5	PE	U4	V4	W4	PE	L1	L2	L3	PE

Connect to dew point sensor(option)
Connect to rotor motor
Connect to rotor limit switch
Connect to drying EGO S4
Connect to regeneration EGO S3
Connect to drying blower
Connect to regeneration blower
Connect to regeneration heater
Connect to drying heater
Connect to power lines

整机版本Ver.D

					Drawer		Version	H	Title SDD-120U(160U)/80H Electrical Components Layout	Drawing NO. SDD-120U(160U)/80H-CE-400V-H-4	Scale		Page 4
					Designer		Approved by				Standard	CE	Totally 6 Pages
					Proofread by				SHINI 信易電熱機械股份有限公司 Shini Plastics Technologies, Inc.		Voltage	400V	
Mark	Before modification	After modification	Modified by	Modify date	Checked by		Date	20180830			Frequency	50Hz	

NO.	Symbol	Name	Manufacturer	Type	Specification	Number	Material number	Remark
1	Q1	Main power switch	EATON	P1-25/EA/SVB	25A	1	YE10125250000	
2	Q2	Circuit-breaker	TECO	BM-63C 3P	10A	1	YE40301003000	
3	Q3	Circuit-breaker	TECO	BM-63C 3P	10A	1	YE40301003000	
4		Excitation release	TECO	MX	220V 50/60Hz	2	YE40023560000	
5	Q4 Q5	Circuit-breaker	TECO	BM-63C 3P	6A	2	YE40300603000	
6	Q6	Circuit-breaker	TECO	BM-63C 2P	3A	1	YE40200203000	
7	Q7	Circuit-breaker	TECO	BM-63C 1P	3A	1	YE40100203000	
8	K1 K2	Contactor	SIEMENS	3RT6016-1AN21	220V 50/60Hz	2	YE00601621000	
9	K3	Contactor	SIEMENS	3RT6017-1AN21	220V 50/60Hz	1	YE00601721000	
10	K4	Contactor	SIEMENS	3RT6017-1AN21	220V 50/60Hz	1	YE00601721000	
11	K8 K9	Middle relay	WEIDMULLER	DRM270730LT	220V 50/60Hz	2	YE03270700000	
12	F1	Thermo overload relay	SIEMENS	3RU6116-1AB0	2.2-3.2A	1	YE01160220000	
13	F2	Thermo overload relay	SIEMENS	3RU6116-1AB0	1.1-1.6A	1	YE01160110000	
14	PCB	Microcomputer control panel +Microcomputer screen	PUMP	K.SF878500A.03	24VDC	1	YE80878500100	
15	T	Transformer	JIUXIN	BY-0407009	IN=400V OUT=230V 500mA	1	YE70402300800	
16	U	DC power	MEAN WELL	NES-35-24	OUT=DC24V 1.5A	1	YE71352400100	
17	H1	Buzzer	SHINI	PK-35A	220V 50/60Hz	1	YE84003500200	(1)
18	S1	Dew-point transducer	CS	CS 217-OEM	POWER=24VDC OUT=4-20mA	1	YE90021700100	(1) (2)
19	S2	Micro switch	TEND	----	----	1	----	(1)
20	S3 S4	Temperature protector	EGO	WR-A-50-300-2500-3	250V 5(4)A	2	----	(1)
21	S5,S6,S7	Thermocouple	SHINI	ST-K	K	3	----	(1)
22	X1	Terminal board	HONEYWELL	$4mm^2$	41A 690V	18	YE60000403200	
23		Terminal board	HONEYWELL	$4mm^2$PE	-	6	YE60000403500	
24		Terminal board	HONEYWELL	$2.5mm^2$	32A 690V	8	YE60002503200	
25		Terminal board	HONEYWELL	$2.5mm^2$PE	-	1	YE60002503400	

整机版本Ver.D

Notes: (1)Means it's not the material inside the control box. (2)Stands for optional dew-point monitor

Mark	Before modification	After modification	Modified by	Modify date

Drawer		Version	H
Designer		Approved by	
Proofread by			
Checked by		Date	20180830

Title: SDD-120U(160U)/80H Electrical Components List 1

Drawing NO.: SDD-120U(160U)/80H-CE-400V-H-5

Scale: /

Standard: CE

Page 5 Totally 6 Pages

Voltage: 400V

Frequency: 50Hz

信易電熱機械股份有限公司
Shini Plastics Technologies, Inc.

NO.	Symbol	Name	Manufacturer	Type	Specification	Number	Material number	Remark
26		Terminal board	HONEYWELL	2.5mm²	32A 690V	2	YE60002503200	(2)
27	X2	Terminal board	HONEYWELL	2.5mm²	32A 690V	4	YE60002503200	
28		Terminal board	HONEYWELL	2.5mm²PE	-	1	YE60002503400	
29	FM	Fan	SUNON	DP-200A	230VAC 40W	1	YM60121200400	(1)
30	M1	Blower	SHINI	-----	400V 0.75kW	1	-----	(1)
31	M2	Blower	SHINI	-----	400V 0.2kW	1	-----	(1)
32	M3	Motor	----	-----	230V 0.015kW	1	-----	(1)
33	EH1	Heater	SHINI	-----	400V 4kW	1	-----	(1)
34	EH2	Heater	SHINI	-----	400V 3kW	1	-----	(1)
35	S10	Communication interface board RS-485 (double Dsub-9pin connector)				1	YE90048501200	(1)
36		Shell RS485(SAL-700G-A-19)0				1	YR40048500000	(1)

整机版本Ver.D

Notes: (1)Means it's not the material inside the control box. (2)Stands for optional dew-point monitor

Mark	Before modification	After modification	Modified by	Modify date

Drawer		Version	H
Designer		Approved by	
Proofread by			
Checked by		Date	20180830

Title: SDD-120U(160U)/80H
Electrical Components List 2

Drawing NO.: SDD-120U(160U)/80H-CE-400V-H-6

信易電熱機械股份有限公司
Shini Plastics Technologies, Inc.

Scale		Page	6
Standard	CE	Totally	6 Pages
Voltage	400V		
Frequency	50Hz		

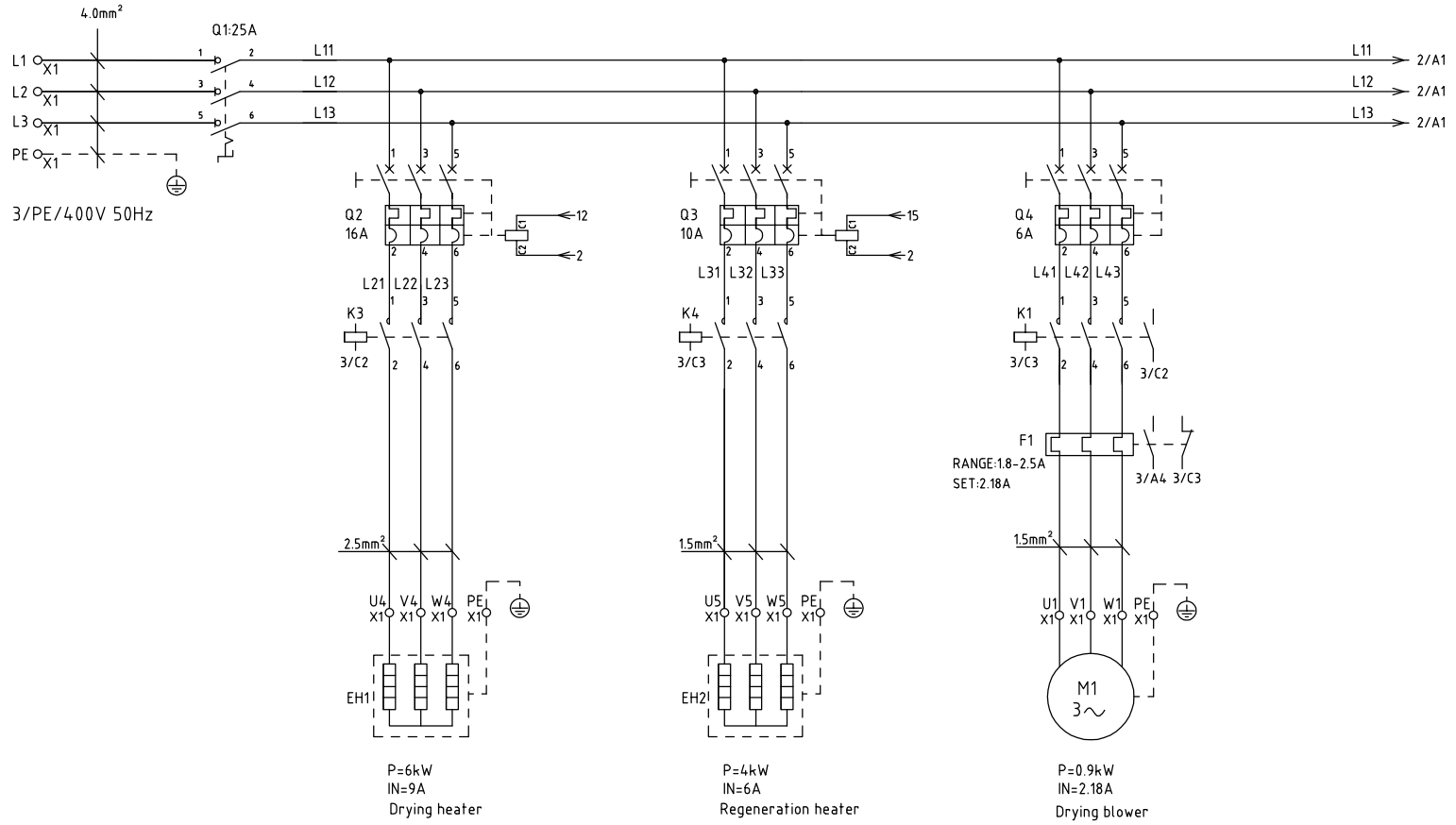

整机版本Ver.D

					Drawer		Version	F	Title: SDD-160U(230)/120H Main Circuit Diagram 1	Drawing NO.: SDD-160U(230U)/120H-CE-400V-F-1	Scale	Page 1
					Designer		Approved by				Standard CE	Totally 6 Pages
					Proofread by				SHINI 信易電熱機械股份有限公司 Shini Plastics Technologies, Inc.		Voltage	400V
Mark	Before modification	After modification	Modified by	Modify date	Checked by		Date	20171023			Frequency	50Hz

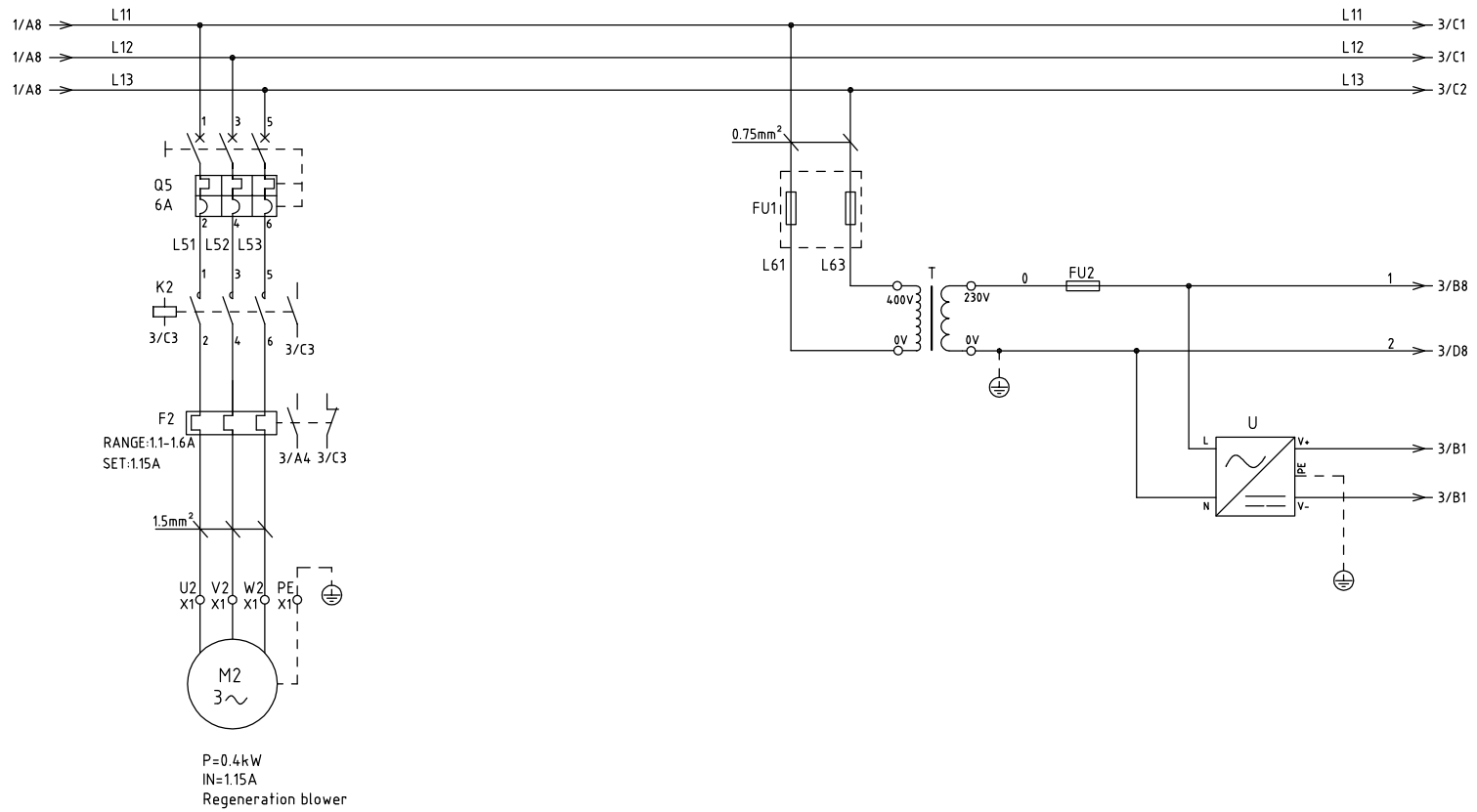

整机版本Ver.D

					Drawer		Version	F	Title SDD-160U(230)/120H Main Circuit Diagram 2	Drawing NO. SDD-160U(230U)/120H-CE-400V-F-2	Scale		Page 2	
					Designer		Approved by				Standard	CE	Totally 6 Pages	
					Proofread by				SHINI 信易電熱機械股份有限公司 Shini Plastics Technologies, Inc.		Voltage	400V		
Mark	Before modification	After modification	Modified by	Modify date	Checked by		Date	20171023			Frequency	50Hz		

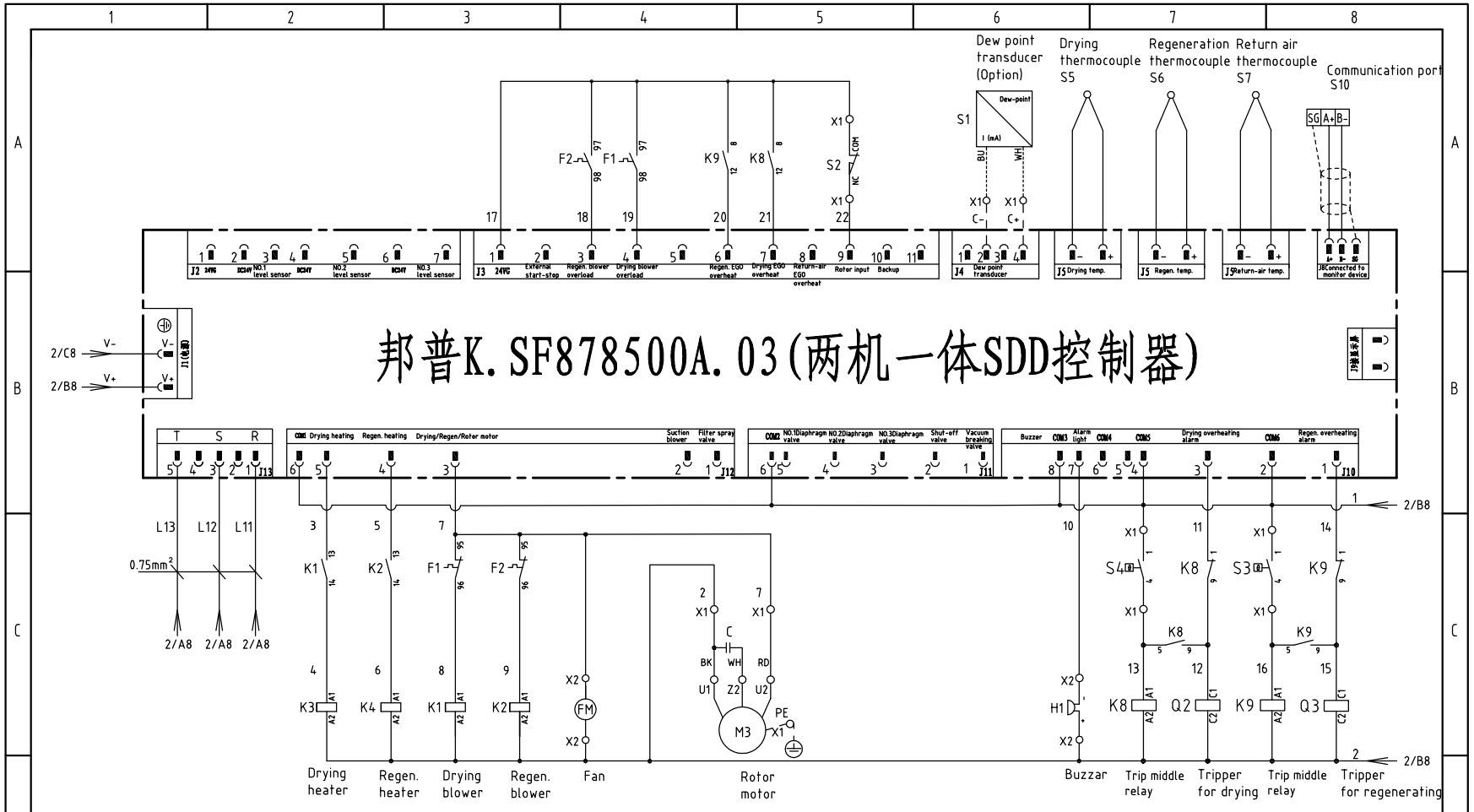

整机版本Ver.D

					Drawer		Version	F	Title: SDD-160U(230)/120H Control Circuit Diagram	Drawing NO. SDD-160U(230U)/120H-CE-400V-F-3	Scale	Page 3
					Designer		Approved by				Standard CE	Totally 6 Pages
					Proofread by				SHINI 信易電熱機械股份有限公司 Shini Plastics Technologies, Inc.		Voltage	400V
Mark	Before modification	After modification	Modified by	Modify date	Checked by		Date	20171023			Frequency	50Hz

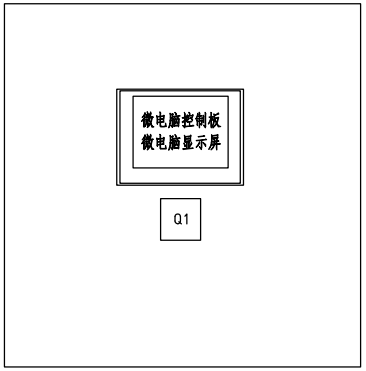

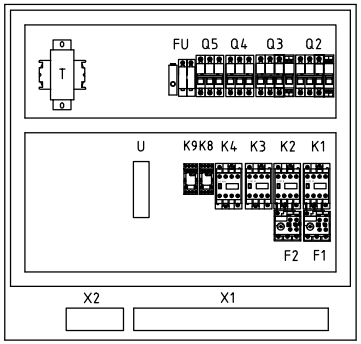

X2

PE	4	3	2	1
PE	7	2	10	2
	Connect to cooling fan			Connect to buzzer

X1

36	35	26	25	PE	24	23	22	21	20	19	18	17	16	PE	15	14	13	PE	9	8	7	PE	6	5	4	PE	3	2	1	PE
C+	C-	7	2	PE	17	22	1	13	1	16	U1	V1	W1	PE	U2	V2	W2	PE	U5	V5	W5	PE	U4	V4	W4	PE	L1	L2	L3	PE
	Connect to dew point sensor(option)		Connect to rotor motor			Connect to rotor limit switch		Connect to drying EGO S4		Connect to regeneration EGO S3			Connect to drying blower				Connect to regeneration blower				Connect to regeneration heater				Connect to drying heater					Connect to power lines

整机版本Ver.D

					Drawer		Version	F	Title SDD-160U(230)/120H Electrical Components Layout	Drawing NO. SDD-160U(230U)/120H-CE-400V-F-4	Scale		Page 4
					Designer		Approved by				Standard	CE	Totally 6 Pages
					Proofread by				信易電熱機械股份有限公司 Shini Plastics Technologies, Inc.		Voltage	400V	
Mark	Before modification	After modification	Modified by	Modify date	Checked by		Date	20171023			Frequency	50Hz	

NO.	Symbol	Name	Manufacturer	Type	Specification	Number	Material number	Remark
1	Q1	Main switch	EATON	P1-25/EA/SVB	25A	1	YE10125250000	
2	Q2	Circuit-breaker	TECO	BM-63C/3016S 3P	16A	1	YE40301603000	
3	Q3	Circuit-breaker	TECO	BM-63C/3010S 3P	10A	1	YE40301003000	
4		Excitation release	CHINT	MX	230V 50/60Hz	2	YE40023560000	
5	Q4 Q5	Circuit-breaker	TECO	BM-63C/3006S 3P	6A	2	YE40300603000	
6	K1 K2	Contactor	SIEMENS	3RT6015-1AN21	7A 1NO 220V 50/60Hz	2	YE00601521000	
7	K3	Contactor	SIEMENS	3RT6018-1AN21	16A 1NO 220V 50/60Hz	1	YE00601800000	
8	K4	Contactor	SIEMENS	3RT6016-1AN21	9A 1NO 220V 50/60Hz	1	YE00601621000	
9	K8 K9	Relay+Base	WEIDMULLER	DRM270730LT	220V配座FS2CO	2	YE03270700000	
10	F1	Overload relay	SIEMENS	3RU6116-1CB0	1.8-2.5A	1	YE01160180000	
11	F2	Overload relay	SIEMENS	3RU6116-1AB0	1.1-1.6A	1	YE01160110000	
12	PCB	Controller	PUMP	K.SF878500A.03	230V 50/60Hz	1	YE80878500100	
13	U	DC power	MEAN WELL	ESA-35-24	OUT=DC24V 1.5A	1	YE71352400100	
14	FU1	Fuse base	CHINT	RT28-32	2P/32A/500V/10×38	1	YE41032200000	
15		Fuse core	CHINT	10×38/500V/gG型	2A	2	YE46002000100	
16	FU2	Fuse	YINDA	FS-10(透明)	2A	1	YE41001000000	
17	T	Transformer	BAIYUN	BY-0407009	IN=400V OUT=230V 500mA	1	YE70402300800	
18	H1	Buzzer	HITPOINT	PK-35A	220V AC/DC	1	YE84003500200	
19	S1	Dew-point transducer	CS	CS 217-OEM	POWER=24VDC OUT=4-20mA	1	YE90021700100	(2)
20	S2	Micro switch	TEND	YBLXW-5/11G2	250V 5(4)A	1	----------	(1)
21	S3 S4	Temperature protector	EGO	---	115-320 °C	2	----------	(1)
22	S5 S6 S7	Thermocouple	SHINI	ST-K	K	3	---	(1)
23	X1	Terminal board	HOLLEYWELL	4mm²	-	15	YE60000403200	
24		Terminal board	HOLLEYWELL	4mm²PE	-	5	YE60000403500	
25		Terminal board	HOLLEYWELL	2.5mm²	-	8	YE60002503200	

整机版本Ver.D

Notes: (1)Means it's not the material inside the control box. (2)Stands for optional dew-point monitor

Mark	Before modification	After modification	Modified by	Modify date

Drawer		Version	F
Designer		Approved by	
Proofread by			
Checked by		Date	20171023

Title: SDD-160U(230)/120H
Electrical Components List 1

Drawing NO.: SDD-160U(230U)/120H-CE-400V-F-5

信易電熱機械股份有限公司
Shini Plastics Technologies, Inc.

Scale	
Standard	CE
Page	5
Totally	6 Pages
Voltage	400V
Frequency	50Hz

NO.	Symbol	Name	Manufacturer	Type	Specification	Number	Material number	Remark
26		Terminal board	HOLLEYWELL	2.5mm²PE	-	1	YE60002503400	
27		Terminal board	HOLLEYWELL	2.5mm²	-	2	YE60002503200	(2)
28	X2	Terminal board	HOLLEYWELL	2.5mm²	-	4	YE60002503200	
29		Terminal board	HOLLEYWELL	2.5mm²PE	-	1	YE60002503400	
30	FM	Fan	SUNON	12×12CM	230V/50/60HZ配塑膠網	1	-----	(1)
31	M1	Blower	SHINI	RB310	400V 0.9kW 50HZ	1	-----	(1)
32	M2	Blower	SHINI	RB205	400V 0.4kW 50HZ	1	-----	(1)
33	M3	Motor	----	3GN-10XK/3GN-60K/3IK15GN-C-T 220V 0.015kW		1	-----	(1)
34	EH1	Pipe heater	SHINI	-----	400V 6.0kW 50HZ/60HZ	1	-----	(1)
35	EH2	Pipe heater	SHINI	-----	400V 4kW 50HZ/60HZ	1	-----	(1)
36		Terminal block E/GKseries(honeywell)	-----	-----	-----	4	YE60000003900	

整机版本Ver.D

Notes: (1)Means it's not the material inside the control box. (2)Stands for optional dew-point monitor

Mark	Before modification	After modification	Modified by	Modify date

Drawer		Version	F
Designer		Approved by	
Proofread by			
Checked by		Date	20171023

Title: SDD-160U(230)/120H
Electrical Components List 2

Drawing NO.: SDD-160U(230U)/120H-CE-400V-F-6

信易電熱機械股份有限公司
Shini Plastics Technologies, Inc.

Scale		Page	6
Standard	CE	Totally	6 Pages
Voltage	400V		
Frequency	50Hz		

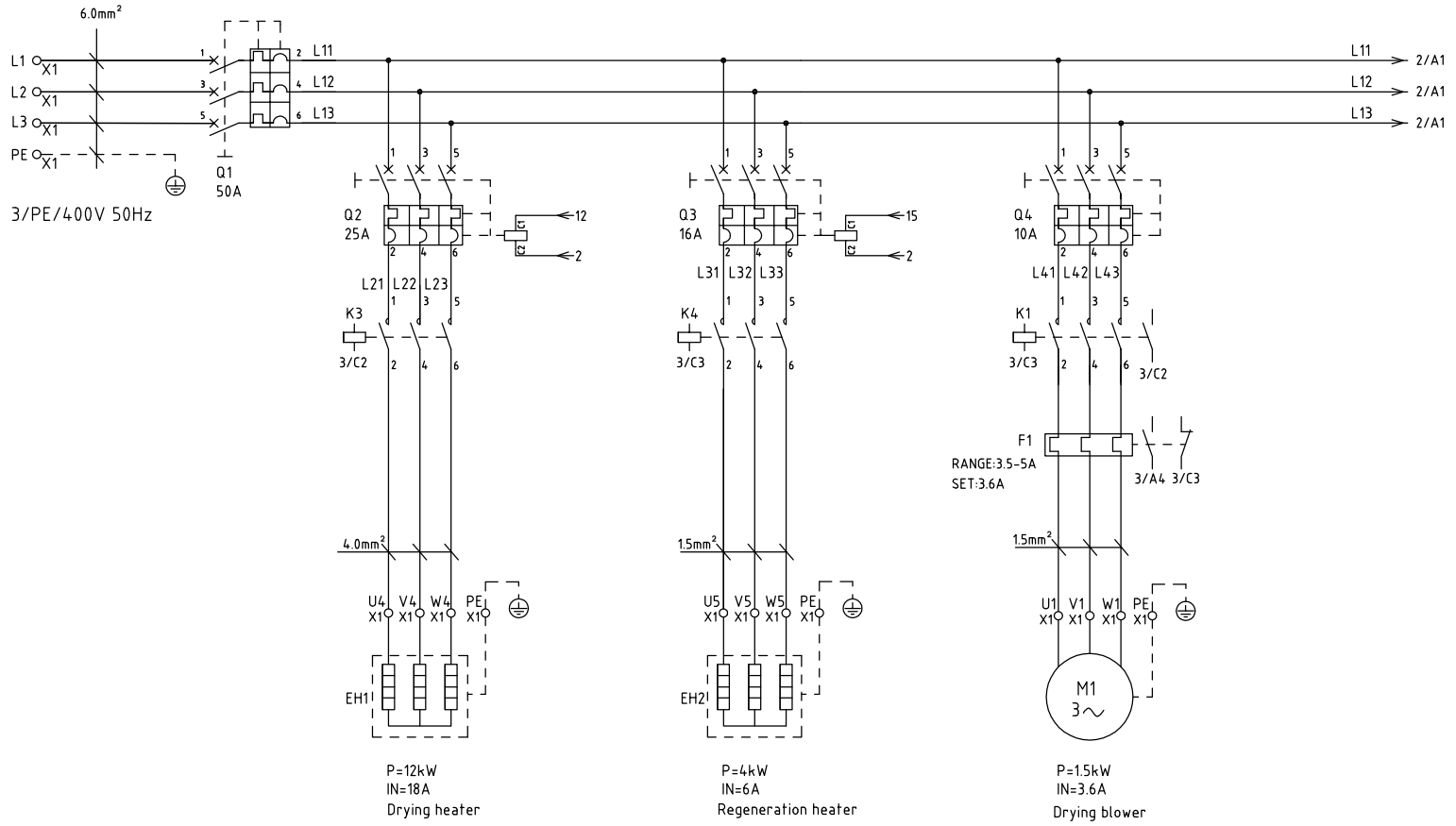

整机版本Ver.D Note: Regeneration heater changed to 6kW when it is 60Hz

					Drawer		Version	F	Title: SDD-300U(450U)/200H Main Circuit Diagram 1	Drawing NO.: SDD-300U(450U)/200H-CE-400V-F-1	Scale	Page 1
					Designer		Approved by				Standard CE	Totally 6 Pages
					Proofread by				信易電熱機械股份有限公司 Shini Plastics Technologies, Inc.		Voltage	400V
Mark	Before modification	After modification	Modified by	Modify date	Checked by		Date	20170929			Frequency	50Hz

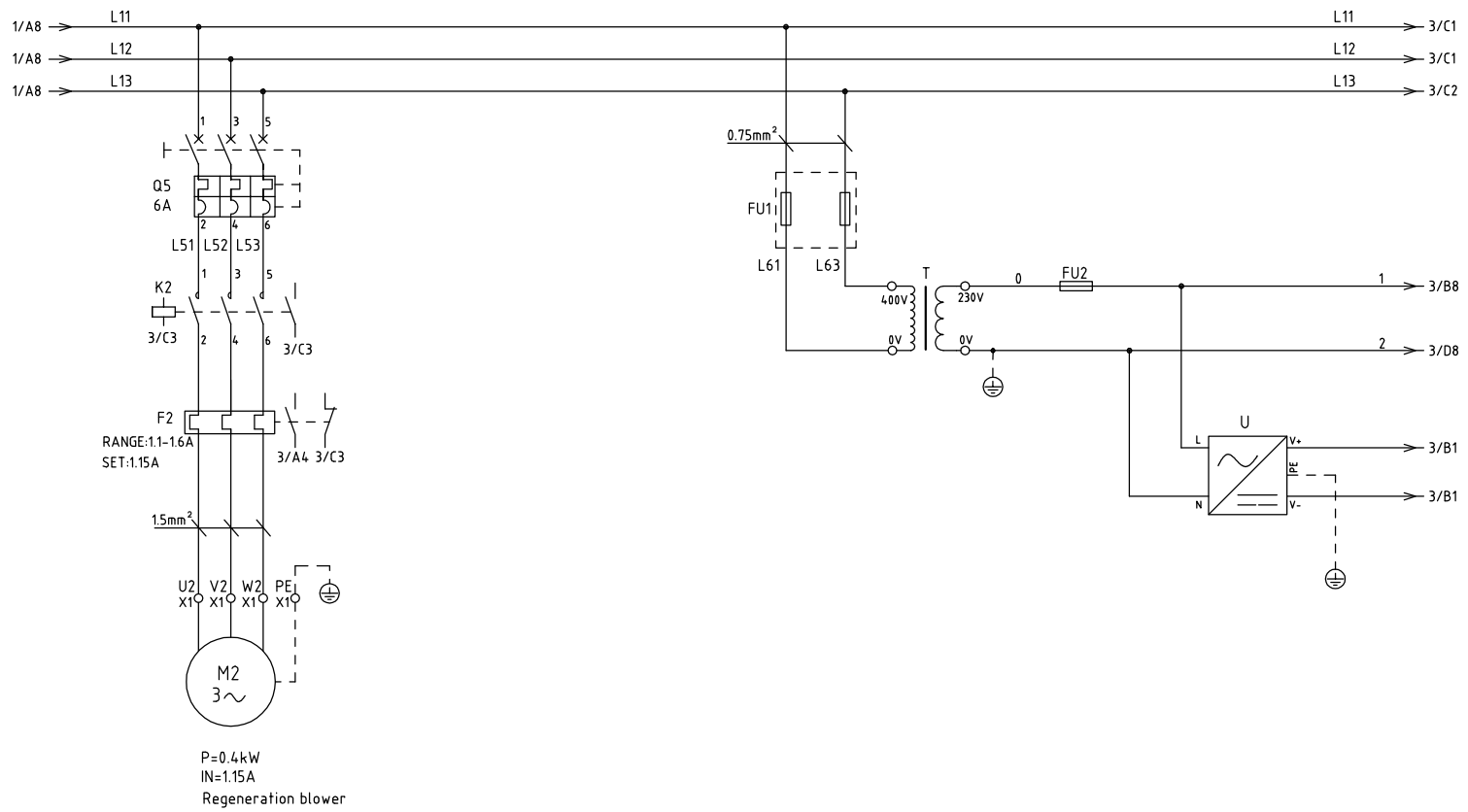

整机版本Ver.D

					Drawer		Version	F	Title SDD-300U(450U)/200H Main Circuit Diagram 2	Drawing NO. SDD-300U(450U)/200H-CE-400V-F-2	Scale		Page 2	
					Designer		Approved by				Standard	CE	Totally 6	Pages
					Proofread by				信易電熱機械股份有限公司 Shini Plastics Technologies, Inc.		Voltage	400V		
Mark	Before modification	After modification	Modified by	Modify date	Checked by		Date	20170929			Frequency	50Hz		

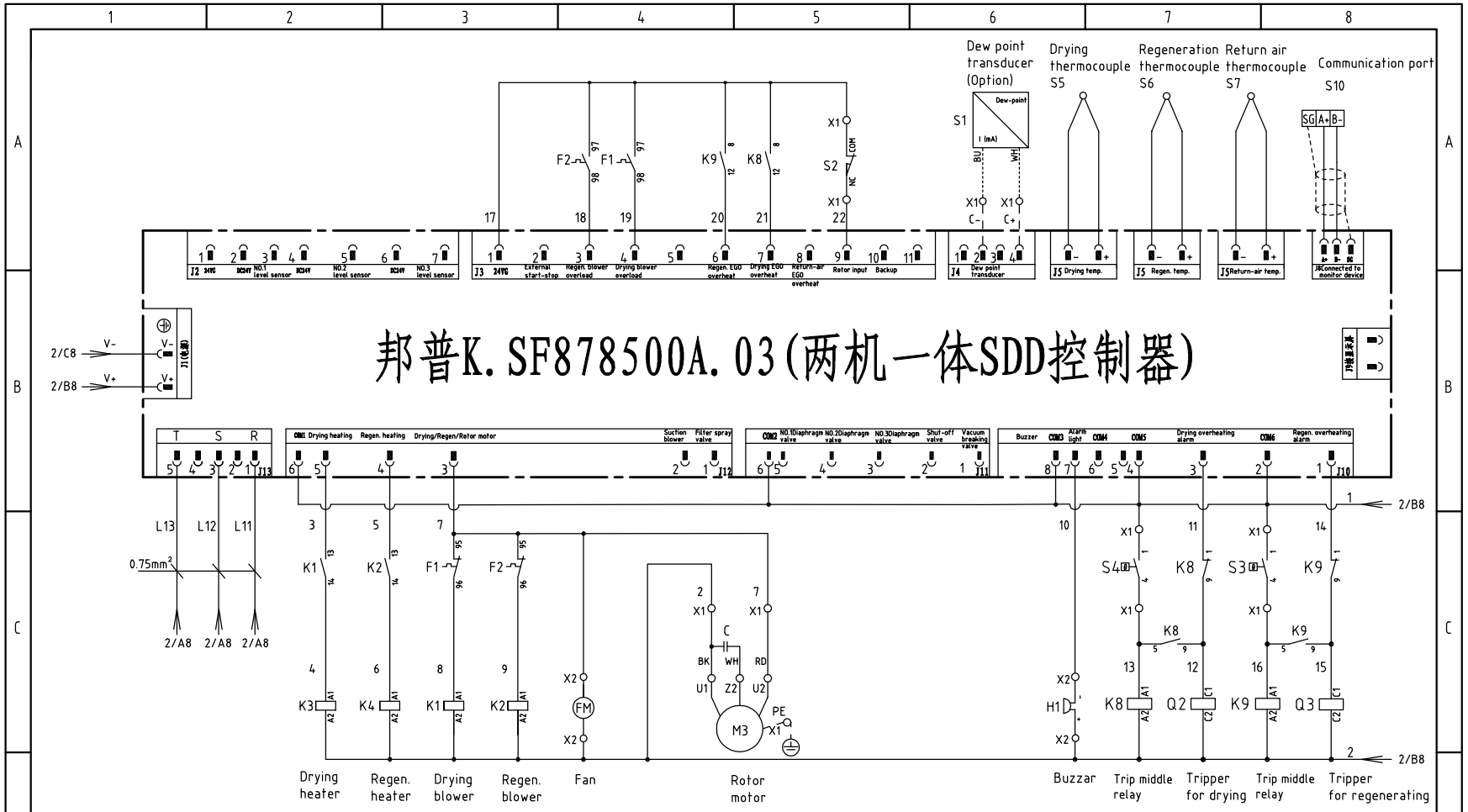

整机版本Ver.D

					Drawer		Version	F	Title: SDD-300U(450U)/200H Control Circuit Diagram	Drawing NO. SDD-300U(450U)/200H-CE-400V-F-3	Scale	Page 3
					Designer		Approved by				Standard CE	Totally 6 Pages
					Proofread by				信易電熱機械股份有限公司 Shini Plastics Technologies, Inc.		Voltage	400V
Mark	Before modification	After modification	Modified by	Modify date	Checked by		Date	20170929			Frequency	50Hz

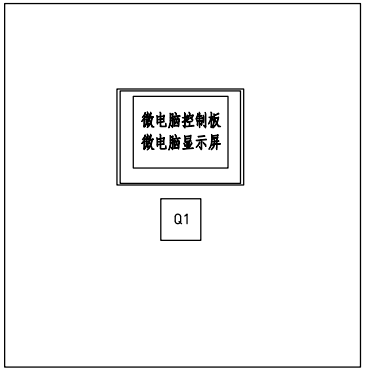

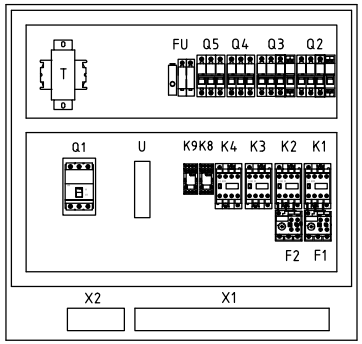

X2

PE	4	3	2	1
PE	7	2	10	2
	Connect to cooling fan			Connect to buzzer

X1

36	35	26	25	PE	24	23	22	21	20	19	18	17	16	PE	15	14	13	PE	9	8	7	PE	6	5	4	PE	3	2	1	PE
C+	C-	7	2	PE	17	22	1	13	1	16	U1	V1	W1	PE	U2	V2	W2	PE	U5	V5	W5	PE	U4	V4	W4	PE	L1	L2	L3	PE
	Connect to dew point sensor(option)		Connect to rotor motor			Connect to rotor limit switch		Connect to drying EGO S4		Connect to regeneration EGO S3			Connect to drying blower			Connect to regeneration blower				Connect to regeneration heater				Connect to drying heater				Connect to power lines	

整机版本Ver.D

					Drawer		Version	F	Title SDD-300U(450U)/200H Electrical Components Layout	Drawing NO. SDD-300U(450U)/200H-CE-400V-F-4	Scale		Page 4
					Designer		Approved by				Standard	CE	Totally 6 Pages
					Proofread by				SHINI 信易電熱機械股份有限公司 Shini Plastics Technologies, Inc.		Voltage	400V	
Mark	Before modification	After modification	Modified by	Modify date	Checked by		Date	20170929			Frequency	50Hz	

NO.	Symbol	Name	Manufacturer	Type	Specification	Number	Material number	Remark
1	Q1	Breaker interlock	ABB	A1A125TMF50/5003PFF	50A	1	YE41105200000	
2	Q2	Circuit-breaker	TECO	BM-63C/3025S 3P	25A	1	YE40302503000	
3	Q3	Circuit-breaker	TECO	BM-63C/3016S 3P	16A	1	YE40301603000	
4		Excitation release	CHINT	MX	220V 50/60Hz	2	YE40023560000	
5	Q4	Circuit-breaker	TECO	BM-63C/3010S 3P	10A	1	YE40301003000	
6	Q5	Circuit-breaker	TECO	BM-63C/3006S 3P	6A	1	YE40300603000	
7	K1	Contactor	SIEMENS	3RT6016-1AN21	9A 1NO 220V 50/60Hz	1	YE00601621000	
8	K2	Contactor	SIEMENS	3RT6016-1AN21	9A 1NO 220V 50/60Hz	1	YE00601621000	
9	K3	Contactor	SIEMENS	3RT6027-1AN21	32A 220V 50/60Hz	1	YE00602722000	
10	K4	Contactor	SIEMENS	3RT6017-1AN21	12A 1NO 220V 50/60Hz	1	YE00601721000	
11	K8 K9	Relay	WEIDMULLER	DRM270730LT	220V 50/60Hz	2	YE03270700000	
12	F1	Overload relay	SIEMENS	3RU6116-1FB0	3.5-5A	1	YE01160350000	
13	F2	Overload relay	SIEMENS	3RU6116-1AB0	1.1-1.6A	1	YE01160110000	
14	PCB	Controller	PUMP	K.SF878500A.03	-----	1	YE80878500100	
15	U	DC power	MEAN WELL	ESA-35-24	OUT=DC24V 1.5A	1	YE71352400100	
16	FU1	Fuse base	CHINT	RT28-32	2P	1	YE41032200000	
17		Fuse	CHINT	10×38 500V	2A	2	YE46002000100	
18	FU2	Fuse	YINDA	FS-10	2A	1	YE41001000000	
19	T	Transformer	BAIYUN	BY-0407009	IN=400V OUT=230V 500mA	1	YE70402300800	
20	H1	Buzzer	HITPOINT	PK-35A	220VAC	1	YE84003500200	
21	S1	Dew-point transducer	CS	CS 217-OEM	POWER=24VDC OUT=4-20mA	1	YE90021700100	(2)
22	S2	Micro switch	TEND	YBLXW-5/11G2	250V 5(4)A	1	----------	(1)
23	S3 S4	Temperature protector	EGO	---	115-320 °C	2	----------	(1)
24	S5 S6 S7	Thermocouple	SHINI	ST-K	K	3	---	(1)
25	X1	Terminal board	HOLLEYWELL	6mm²	-	3	YE60000603200	

整机版本Ver.D Notes: (1)Means it's not the material inside the control box. (2)Stands for optional dew-point monitor

Mark	Before modification	After modification	Modified by	Modify date

Drawer		Version	F	Title	SDD-300U(450U)/200H Electrical Components List 1
Designer		Approved by		Drawing NO.	SDD-300U(450U)/200H-CE-400V-F-5
Proofread by				Scale	/
Checked by		Date	20170929	Standard	CE
				Page	5
				Totally	6 Pages
				Voltage	400V
				Frequency	50Hz

信易電熱機械股份有限公司
Shini Plastics Technologies, Inc.

NO.	Symbol	Name	Manufacturer	Type	Specification	Number	Material number	Remark
26		Terminal board	HOLLEYWELL	6mm²PE	-	1	YE60000603500	
27		Terminal board	HOLLEYWELL	4mm²	-	12	YE60000403200	
28		Terminal board	HOLLEYWELL	4mm²PE	-	4	YE60000403500	
29		Terminal board	HOLLEYWELL	2.5mm²	-	8	YE60002503200	
30		Terminal board	HOLLEYWELL	2.5mm²PE	-	1	YE60002503400	
31		Terminal board	HOLLEYWELL	2.5mm²	-	2	YE60002503200	(2)
32	X2	Terminal board	HOLLEYWELL	2.5mm²	-	4	YE60002503200	
33		Terminal board	HOLLEYWELL	2.5mm²PE	-	1	YE60002503400	
34	FM	Fan	SUNON	DP-200A	230VAC 40W	1	-----	(1)
35	M1	Blower	SHINI	-----	400V 1.5kW	1	-----	(1)
36	M2	Blower	SHINI	-----	400V 0.4kW	1	-----	(1)
37	M3	Motor	----	-----	230V 0.006kW	1	-----	(1)
38	EH1	Pipe heater	SHINI	-----	400V 12kW	1	-----	(1)
39	EH2	Pipe heater	SHINI	-----	400V 4kW **50Hz机型**	1	-----	(1)
40	EH2	Pipe heater	SHINI	-----	400V 6kW **60Hz机型**	1	-----	(1)
41	S10	Communication interface board RS-485 (double Dsub-9pin connector)	--	--	--	1	YE90048501200	
42		Shell RS485(SAL-700G-A-19)0	--	--	--	1	YR40048500000	
43		Terminal block E/GKseries(honeywell)			PCS	5	YE60000003900	

整机版本Ver.D Notes: (1)Means it's not the material inside the control box. (2)Stands for optional dew-point monitor

Mark	Before modification	After modification	Modified by	Modify date

Drawer		Version	F
Designer		Approved by	
Proofread by			
Checked by		Date	20170929

Title: SDD-300U(450U)/200H
Electrical Components List 2

Drawing NO.: SDD-300U(450U)/200H-CE-400V-F-6

SHINI 信易電熱機械股份有限公司 Shini Plastics Technologies, Inc.

Scale		Page	6
Standard	CE	Totally	6 Pages
Voltage	400V		
Frequency	50Hz		

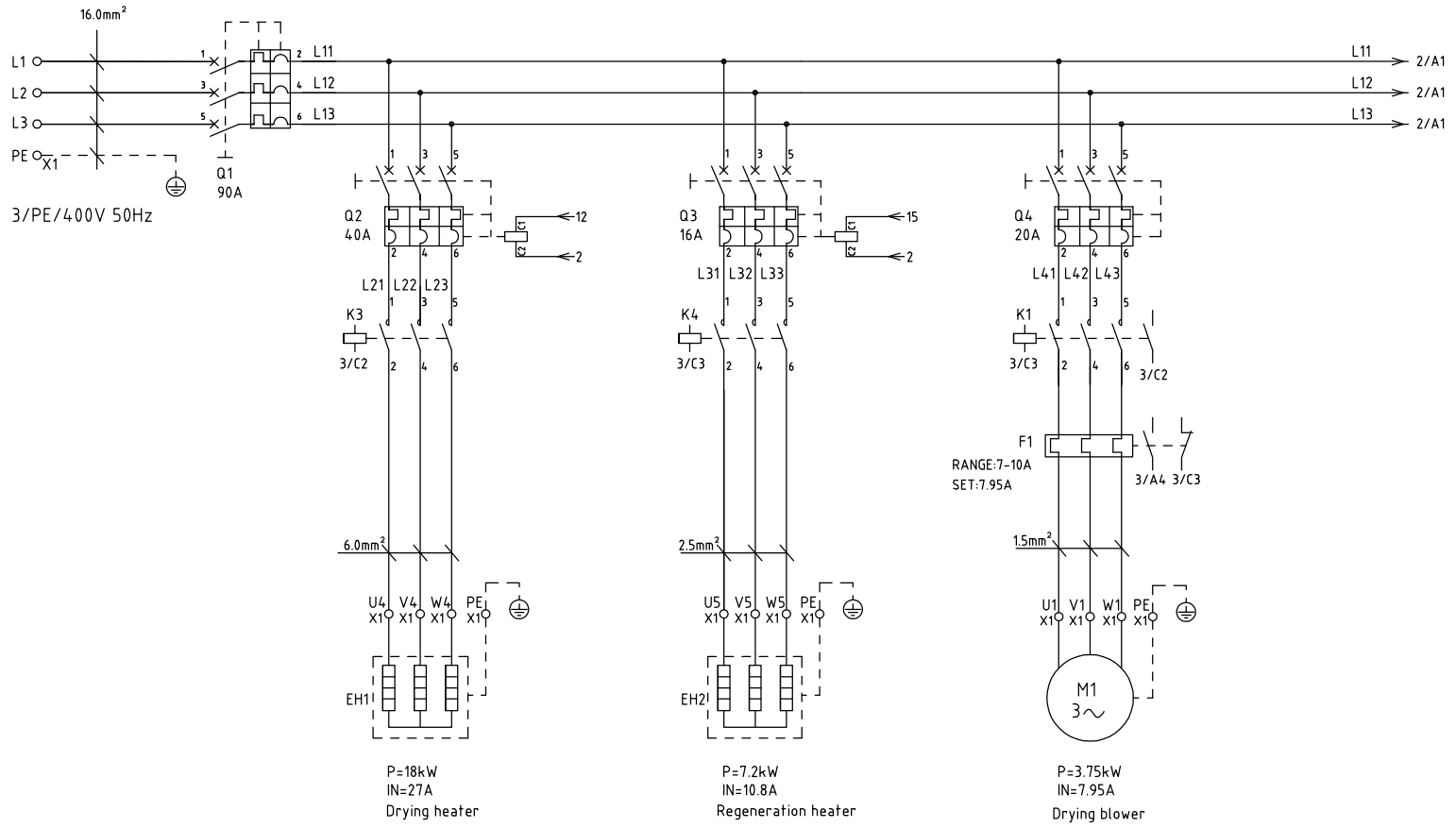

整机版本Ver.C

					Drawer		Version	D	Title: SDD-600U(750U)/400H Main Circuit Diagram 1	Drawing NO. SDD-600U(750U)/400H-CE-400V-D-1	Scale		Page 1
					Designer		Approved by				Standard	CE	Totally 6 Pages
					Proofread by				信易電熱機械股份有限公司 Shini Plastics Technologies, Inc.		Voltage	400V	
Mark	Before modification	After modification	Modified by	Modify date	Checked by		Date	20170929			Frequency	50Hz	

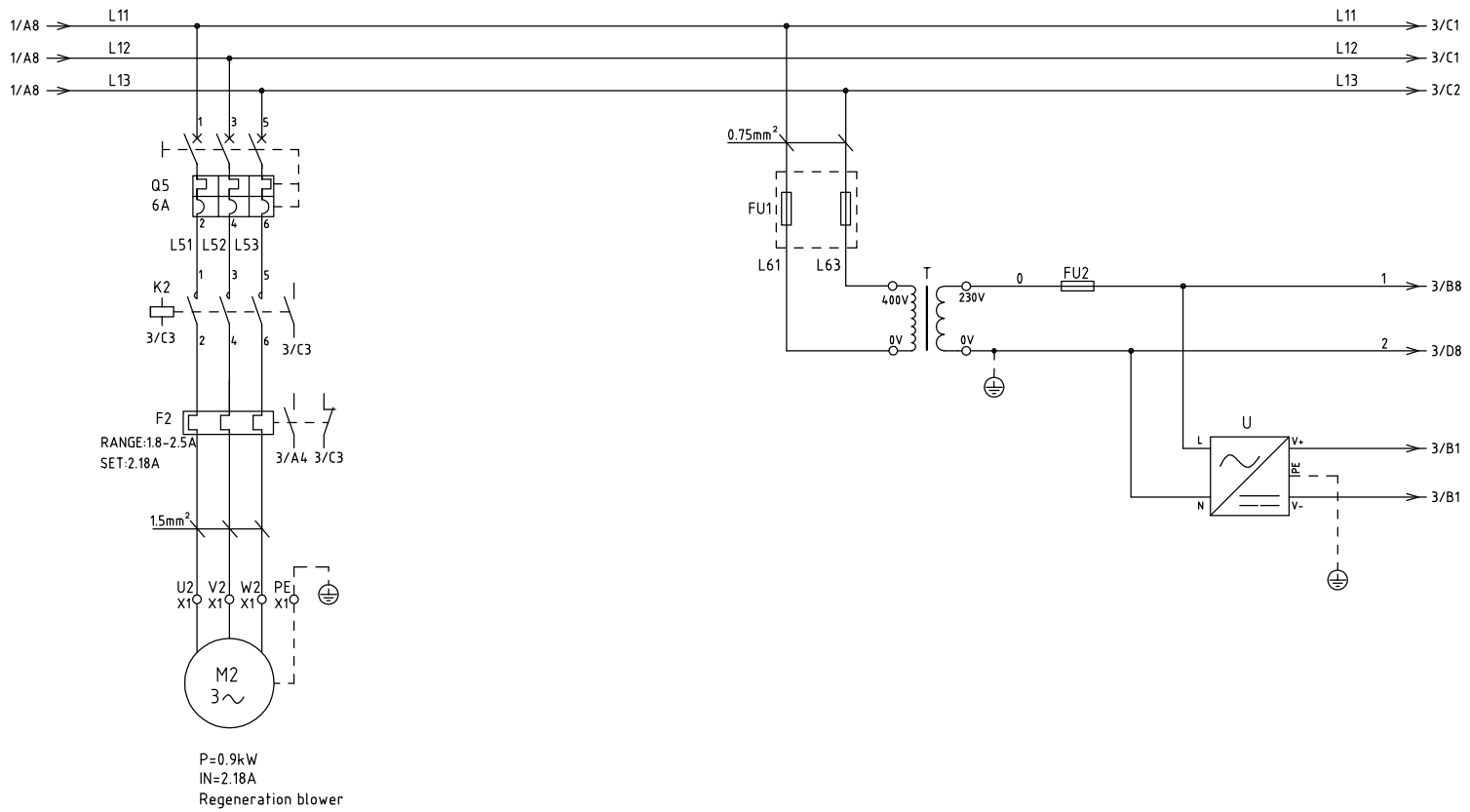

整机版本Ver.C

					Drawer		Version	D	Title SDD-600U(750U)/400H Main Circuit Diagram 2	Drawing NO. SDD-600U(750U)/400H-CE-400V-D-2	Scale		Page 2
					Designer		Approved by				Standard	CE	Totally 6 Pages
					Proofread by				信易電熱機械股份有限公司 Shini Plastics Technologies, Inc.		Voltage	400V	
Mark	Before modification	After modification	Modified by	Modify date	Checked by		Date	20170929			Frequency	50Hz	

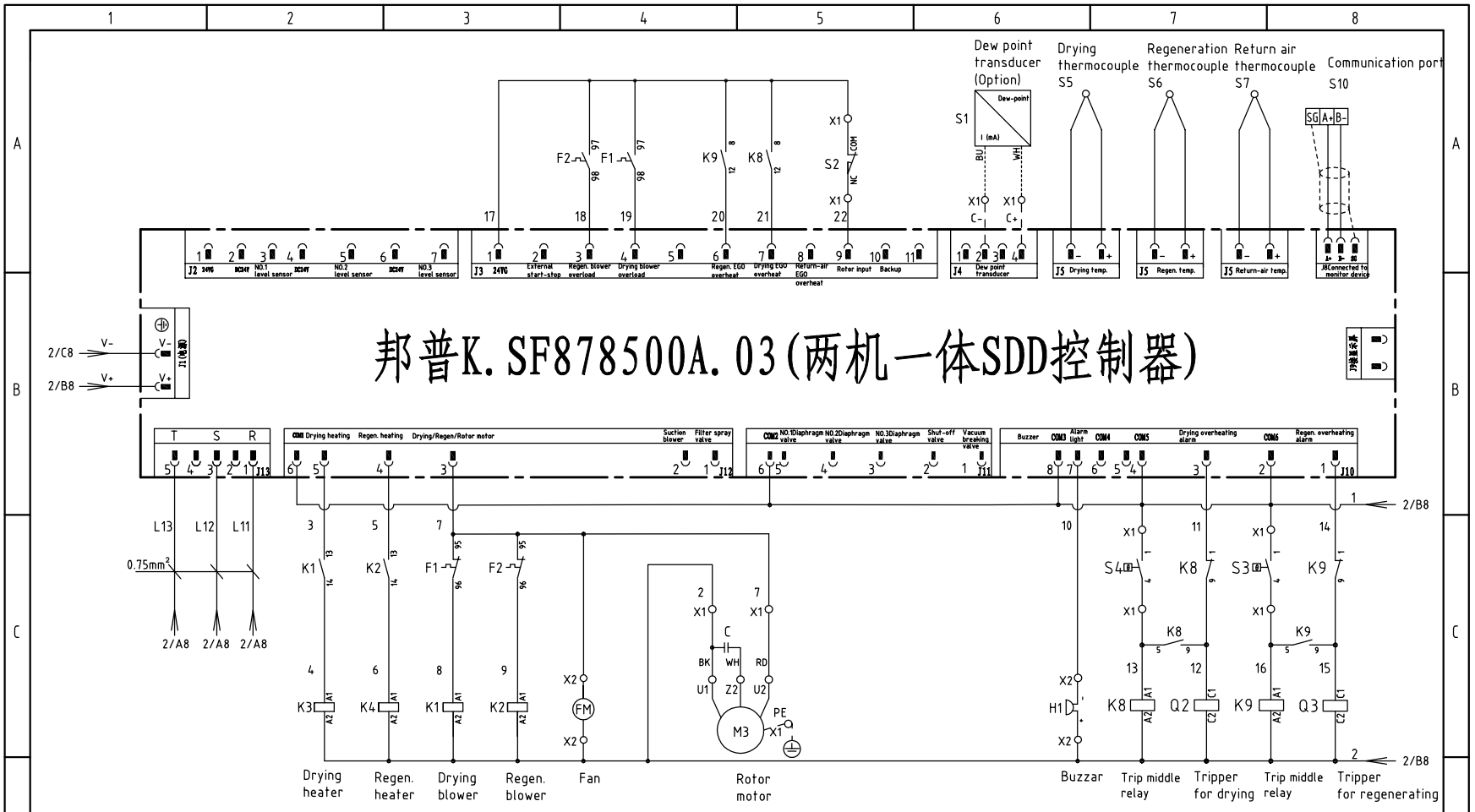

整机版本Ver.C

					Drawer		Version	D	Title SDD-600U(750U)/400H Control Circuit Diagram	Drawing NO. SDD-600U(750U)/400H-CE-400V-D-3	Scale	Page 3
					Designer		Approved by				Standard CE	Totally 6 Pages
					Proofread by				SHINI 信易電熱機械股份有限公司 Shini Plastics Technologies, Inc.		Voltage	400V
Mark	Before modification	After modification	Modified by	Modify date	Checked by		Date	20170929			Frequency	50Hz

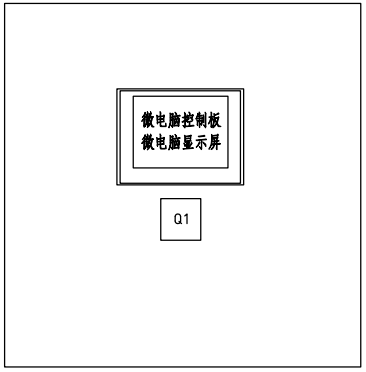

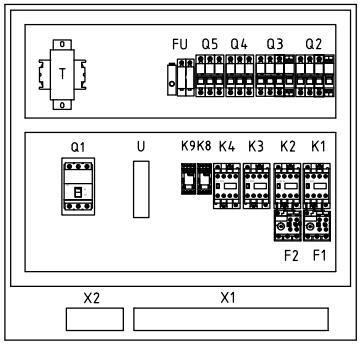

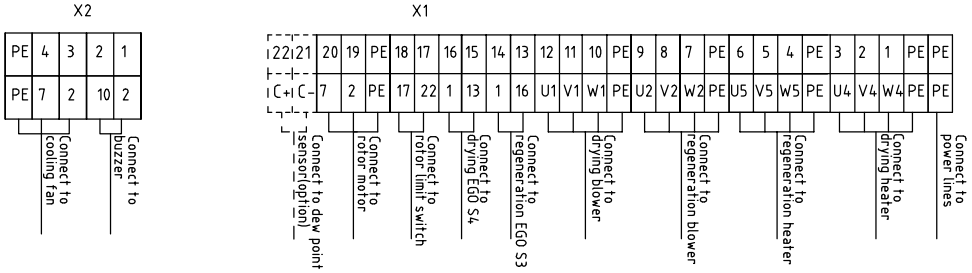

整机版本Ver.C

					Drawer		Version	D	Title: SDD-600U(750U)/400H Electrical Components Layout	Drawing NO.: SDD-600U(750U)/400H-CE-400V-D-4	Scale		Page 4
					Designer		Approved by				Standard	CE	Totally 6 Pages
					Proofread by				信易電熱機械股份有限公司 Shini Plastics Technologies, Inc.		Voltage	400V	
Mark	Before modification	After modification	Modified by	Modify date	Checked by		Date	20170929			Frequency	50Hz	

NO.	Symbol	Name	Manufacturer	Type	Specification	Number	Material number	Remark
1	Q1	Breaker interlock	ABB	A1A125TMF90	90A	1	YE41109200000	
2	Q2	Circuit-breaker	TECO	BM-63C/3040S 3P	40A	1	YE40304003000	
3	Q3	Circuit-breaker	TECO	BM-63C/3016S 3P	16A	1	YE40301603000	
4	Q4	Circuit-breaker	TECO	BM-63C/3020S 3P	20A	1	YE40302003000	
5	Q5	Circuit-breaker	TECO	BM-63C/3006S 3P	6A	1	YE40300603000	
6		Excitation release	CHINT	MX	220V 50/60Hz	2	YE40023560000	
7	K1	Contactor	SIEMENS	3RT6017-1AN21	12A 1NO 220V 50/60Hz	1	YE00601721000	
8	K2	Contactor	SIEMENS	3RT6016-1AN21	9A 220V 50/60Hz	1	YE00601621000	
9	K3	Contactor	SIEMENS	3RT6028-1AN21	38A 220V 50/60Hz	1	YE00602822000	
10	K4	Contactor	SIEMENS	3RT6018-1AN21	16A 1NO 220V 50/60Hz	1	YE00601800000	
11	K8 K9	Relay	WEIDMULLER	DRM270730LT	220V 50/60Hz	2	YE03270700000	
12	F1	Overload relay	SIEMENS	3RU6116-1JB0	7-10A	1	YE01167100000	
13	F2	Overload relay	SIEMENS	3RU6116-1CB0	1.8-2.5A	1	YE01160180000	
14	PCB	Controller	PUMP	K.SF878500A.03	-----	1	YE80878500100	
15	U	DC power	MEAN WELL	ESA-35-24	OUT=DC24V 1.5A	1	YE71352400100	
16	FU1	Fuse base	CHINT	RT28-32	2P	1	YE41032200000	
17		Fuse	CHINT	10×38 500V	2A	2	YE46002000100	
18	FU2	Fuse	YINDA	FS-10	2A	1	YE41001000000	
19	T	Transformer	BAIYUN	BY-0407009	IN=400V OUT=230V 500mA	1	YE70402300800	
20	H1	Buzzer	HITPOINT	PK-35A	220VAC	1	YE84003500200	
21	S1	Dew-point transducer	CS	CS 217-OEM	POWER=24VDC OUT=4-20mA	1	YE90021700100	(2)
22	S2	Micro switch	TEND	YBLXW-5/11G2	250V 5(4)A	1	----------	(1)
23	S3 S4	Temperature protector	EGO	---	115-320 °C	2	----------	(1)
24	S5 S6 S7	Thermocouple	SHINI	ST-K	K	3	---	(1)
25	X1	Terminal board	HOLLEYWELL	16mm²PE	-	1	YE60001603500	

整机版本Ver.C Notes: (1)Means it's not the material inside the control box. (2)Stands for optional dew-point monitor

Mark	Before modification	After modification	Modified by	Modify date

Drawer		Version	D
Designer		Approved by	
Proofread by			
Checked by		Date	20170929

Title: SDD-600U(750U)/400H
Electrical Components List 1

Drawing NO.: SDD-600U(750U)/400H-CE-400V-D-5

信易電熱機械股份有限公司
Shini Plastics Technologies, Inc.

Scale		Page	5
Standard	CE	Totally	6 Pages
Voltage	400V		
Frequency	50Hz		

NO.	Symbol	Name	Manufacturer	Type	Specification	Number	Material number	Remark
26		Terminal board	HOLLEYWELL	6mm²	-	3	YE60000603200	
27		Terminal board	HOLLEYWELL	6mm²PE	-	1	YE60000603500	
28		Terminal board	HOLLEYWELL	4mm²	-	9	YE60000403200	
29		Terminal board	HOLLEYWELL	4mm²PE	-	3	YE60000403500	
30		Terminal board	HOLLEYWELL	2.5mm²	-	8	YE60002503200	
31		Terminal board	HOLLEYWELL	2.5mm²PE	-	1	YE60002503400	
32		Terminal board	HOLLEYWELL	2.5mm²	-	2	YE60002503200	(2)
33	X2	Terminal board	HOLLEYWELL	2.5mm²	-	4	YE60002503200	
34		Terminal board	HOLLEYWELL	2.5mm²PE	-	1	YE60002503400	
35	FM	Fan	SUNON	DP-200A	230VAC 40W	1	-----	(1)
36	M1	Blower	SHINI	-----	400V 3.75kW	1	-----	(1)
37	M2	Blower	SHINI	-----	400V 0.9kW	1	-----	(1)
38	M3	Motor	----	-----	230V 0.015kW	1	-----	(1)
39	EH1	Pipe heater	SHINI	-----	400V 18kW	1	-----	(1)
40	EH2	Pipe heater	SHINI	-----	400V 7.2kW	1	-----	(1)
41	S10	Communication interface board RS-485 (double Dsub-9pin connector)	--	--	--	1	YE90048501200	
42		Shell RS485(SAL-700G-A-19)0	--	--	--	1	YR40048500000	
43		Terminal block E/GKseries(honeywell)			PCS	5	YE60000003900	

整机版本Ver.C

Notes: (1)Means it's not the material inside the control box. (2)Stands for optional dew-point monitor

Mark	Before modification	After modification	Modified by	Modify date

Drawer		Version	D
Designer		Approved by	
Proofread by			
Checked by		Date	20170929

Title: SDD-600U(750U)/400H Electrical Components List 2

Drawing NO.: SDD-600U(750U)/400H-CE-400V-D-6

信易電熱機械股份有限公司 Shini Plastics Technologies, Inc.

Scale		Page	6
Standard	CE	Totally	6 Pages
Voltage	400V		
Frequency	50Hz		

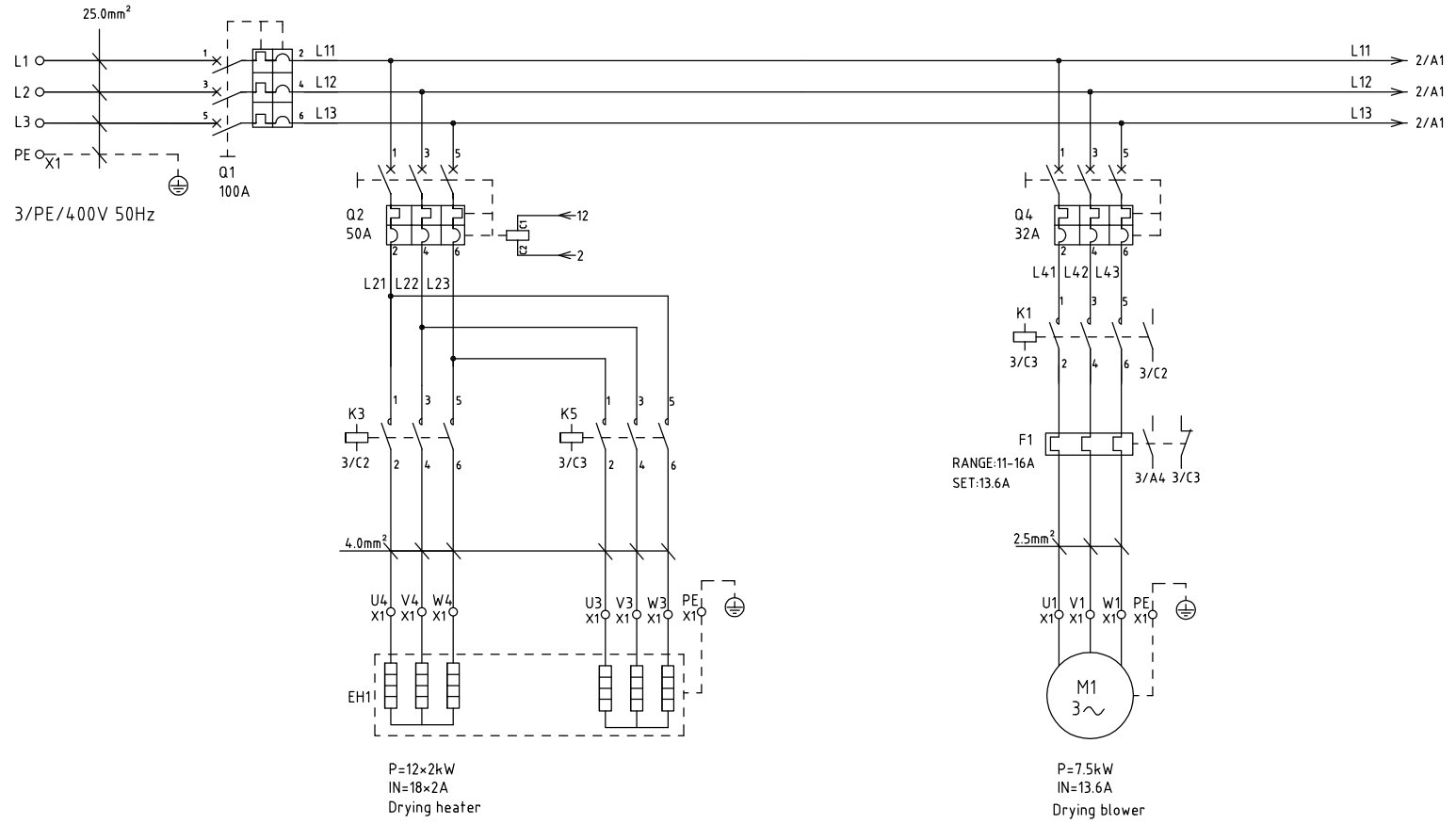

整机版本Ver.D

					Drawer		Version	E	Title: SDD-900U/700H Main Circuit Diagram 1	Drawing NO.: SDD-900U/700H-CE-400V-E-1	Scale		Page 1
					Designer		Approved by				Standard	CE	Totally 6 Pages
					Proofread by				信易電熱機械股份有限公司 Shini Plastics Technologies, Inc.		Voltage	400V	
Mark	Before modification	After modification	Modified by	Modify date	Checked by		Date	20170929			Frequency	50Hz	

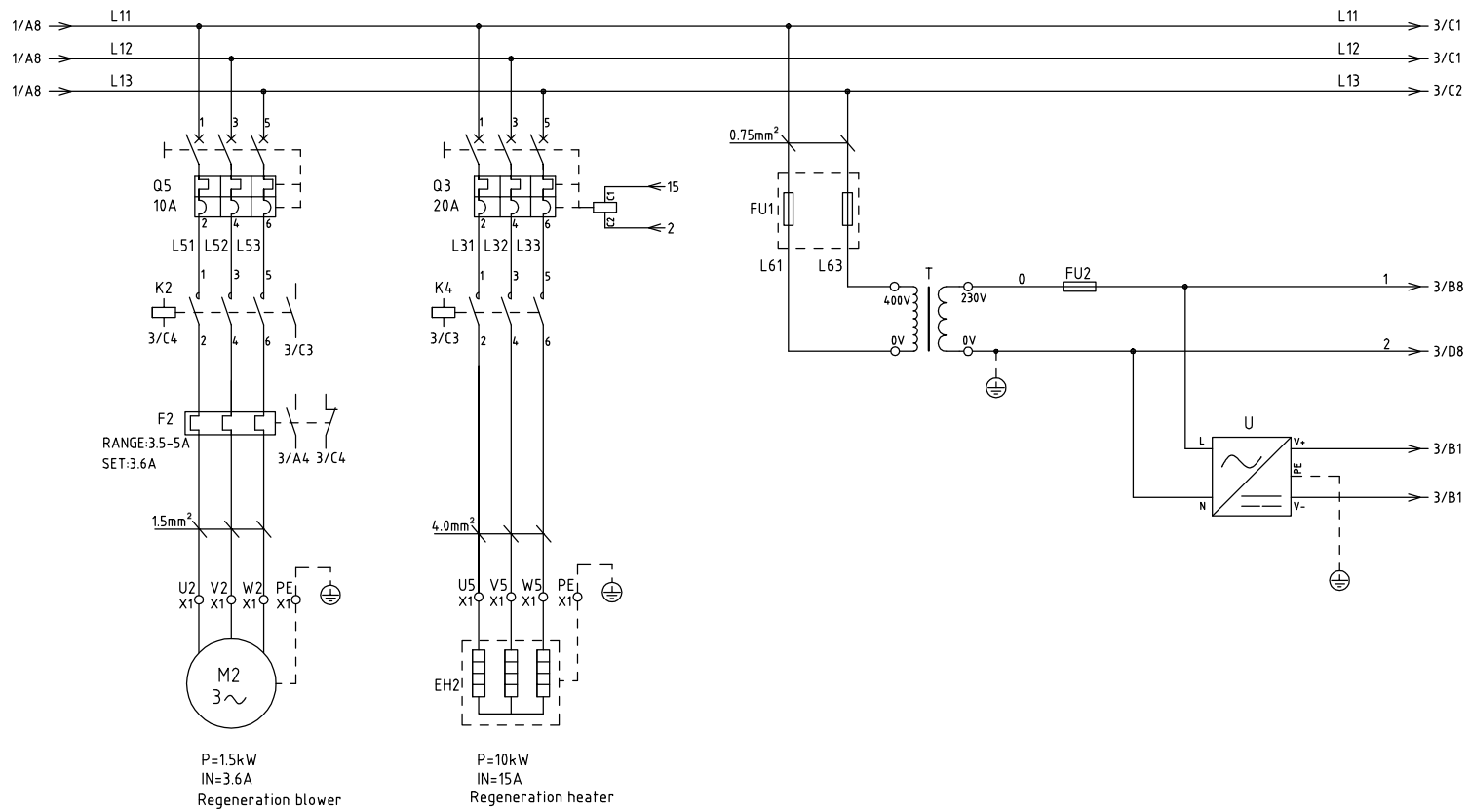

整机版本Ver.D

					Drawer		Version	E	Title: SDD-900U/700H	Drawing NO.	Scale		Page 2
					Designer		Approved by		Main Circuit Diagram 2	SDD-900U/700H-CE-400V-E-2	Standard	CE	Totally 6 Pages
					Proofread by				SHINI 信易電熱機械股份有限公司 Shini Plastics Technologies, Inc.		Voltage	400V	
Mark	Before modification	After modification	Modified by	Modify date	Checked by		Date	20170929			Frequency	50Hz	

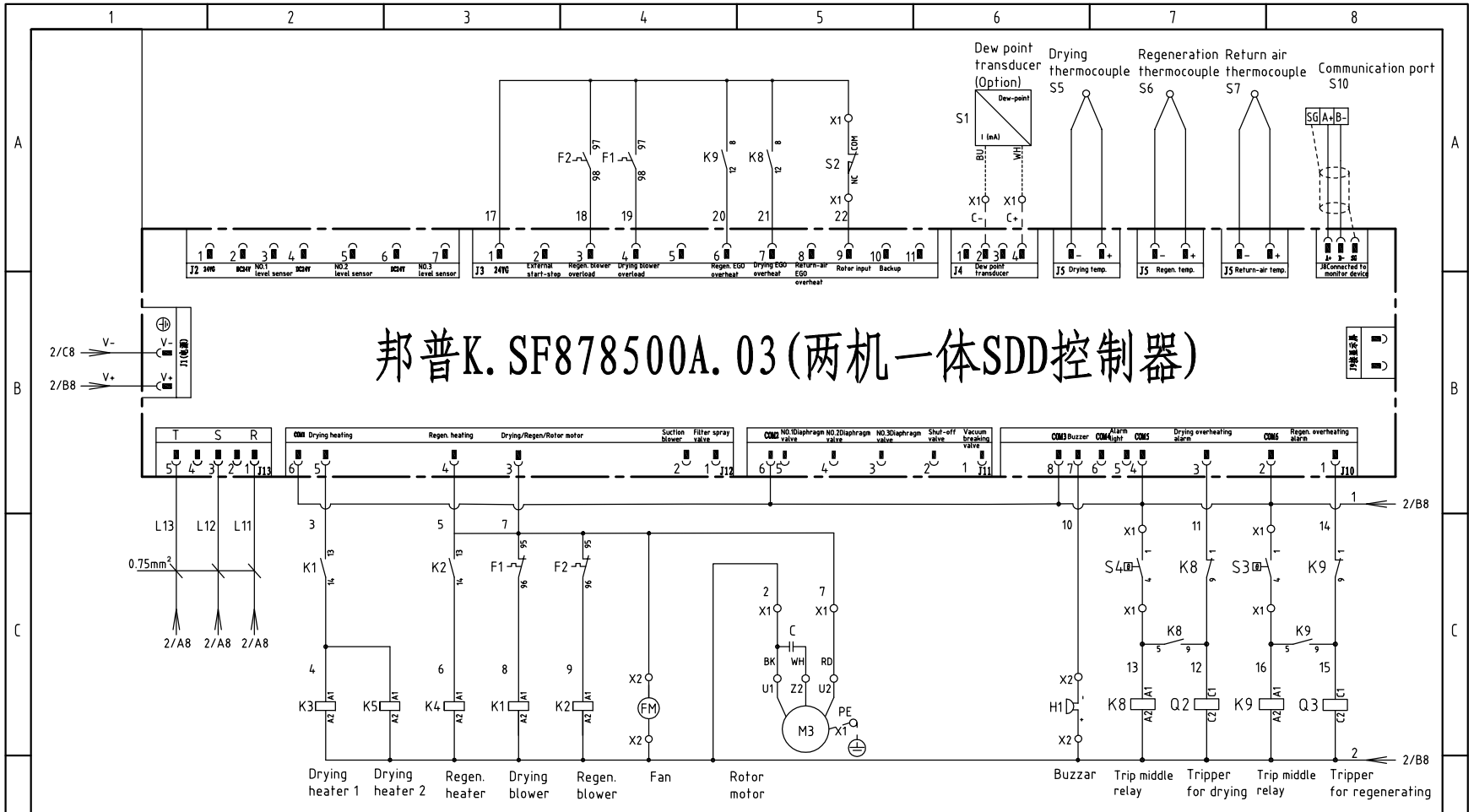

整机版本Ver.D

					Drawer		Version	E	Title: SDD-900U/700H Control Circuit Diagram	Drawing NO. SDD-900U/700H-CE-400V-E-3	Scale	Page 3
					Designer		Approved by				Standard CE	Totally 6 Pages
					Proofread by				信易電熱機械股份有限公司 Shini Plastics Technologies, Inc.		Voltage	400V
Mark	Before modification	After modification	Modified by	Modify date	Checked by		Date	20170929			Frequency	50Hz

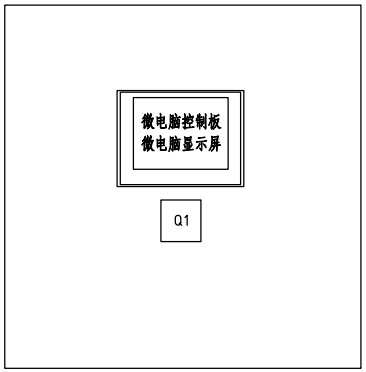

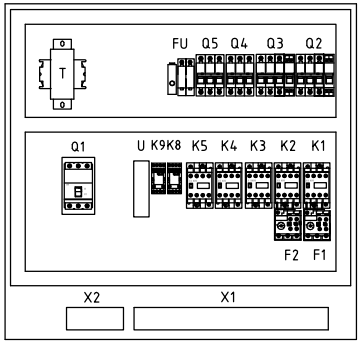

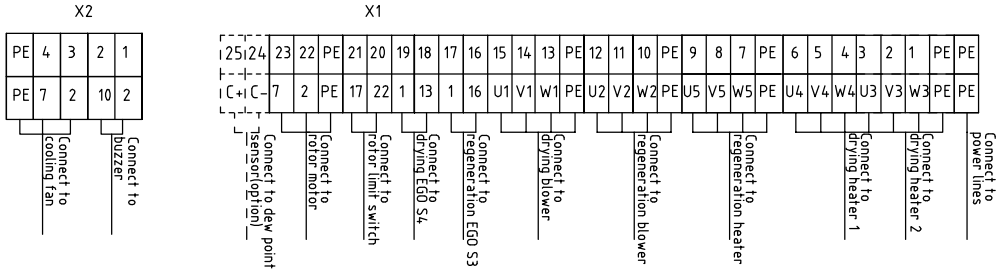

整机版本Ver.D

					Drawer		Version	E	Title: SDD-900U/700H Electrical Components Layout	Drawing NO.: SDD-900U/700H-CE-400V-E-4	Scale	Page 4
					Designer		Approved by				Standard CE	Totally 6 Pages
					Proofread by				信易電熱機械股份有限公司 Shini Plastics Technologies, Inc.		Voltage	400V
Mark	Before modification	After modification	Modified by	Modify date	Checked by		Date	20170929			Frequency	50Hz

NO.	Symbol	Name	Manufacturer	Type	Specification	Number	Material number	Remark
1	Q1	Breaker interlock	ABB	A1A125TMF100	100A	1	YE41110200000	
2	Q2	Circuit-breaker	TECO	BM-63C/3050S 3P	50A	1	YE40305003000	
3	Q3	Circuit-breaker	TECO	BM-63C/3020S 3P	20A	1	YE40302003000	
4	Q4	Circuit-breaker	TECO	BM-63C/3032S 3P	32A	1	YE40303203000	
5	Q5	Circuit-breaker	TECO	BM-63C/3010S 3P	10A	1	YE40301003000	
6		Excitation release	CHINT	MX	220V 50/60Hz	2	YE40023560000	
7	K1	Contactor	SIEMENS	3RT6026-1AN20	25A 220V 50/60Hz	1	YE00602622000	
8	K2	Contactor	SIEMENS	3RT6016-1AN21	9A 220V 50/60Hz	1	YE00601621000	
9	K3 K5	Contactor	SIEMENS	3RT6027-1AN21	32A 220V 50/60Hz	2	YE00602722000	
10	K4	Contactor	SIEMENS	3RT6026-1AN21	25A 220V 50/60Hz	1	YE00602622000	
11	K8 K9	Relay	WEIDMULLER	DRM270730LT	220V 50/60Hz	2	YE03270700000	
12	F1	Overload relay	SIEMENS	3RU6126-4AB0	11-16A	1	YE01260110000	
13	F2	Overload relay	SIEMENS	3RU6116-1FB0	3.5-5A	1	YE01160350000	
14	PCB	Controller	PUMP	K.SF878500A.03	-----	1	YE80878500100	
15	U	DC power	MEAN WELL	ESA-35-24	OUT=DC24V 1.5A	1	YE71352400100	
16	FU1	Fuse base	CHINT	RT28-32	2P	1	YE41032200000	
17		Fuse	CHINT	10×38 500V	2A	2	YE46002000100	
18	FU2	Fuse	YINDA	FS-10	2A	1	YE41001000000	
19	T	Transformer	BAIYUN	BY-0407009	IN=400V OUT=230V 500mA	1	YE70402300800	
20	H1	Buzzer	HITPOINT	PK-35A	220VAC	1	YE84003500200	
21	S1	Dew-point transducer	CS	CS 217-OEM	POWER=24VDC OUT=4-20mA	1	YE90021700100	(2)
22	S2	Micro switch	TEND	YBLXW-5/11G2	250V 5(4)A	1	----------	(1)
23	S3 S4	Temperature protector	EGO	---	115-320 °C	2	----------	(1)
24	S5 S6 S7	Thermocouple	SHINI	ST-K	K	3	---	(1)
25	X1	Terminal board	HOLLEYWELL	35mm²PE	-	1	YE60003503500	

整机版本Ver.D

Notes: (1)Means it's not the material inside the control box. (2)Stands for optional dew-point monitor

Mark	Before modification	After modification	Modified by	Modify date

Drawer		Version	E
Designer		Approved by	
Proofread by			
Checked by		Date	20170929

Title: SDD-900U/700H
Electrical Components List 1

Drawing NO.: SDD-900U/700H-CE-400V-E-5

信易電熱機械股份有限公司
Shini Plastics Technologies, Inc.

Scale		Page	5
Standard	CE	Totally	6 Pages
Voltage	400V		
Frequency	50Hz		

NO.	Symbol	Name	Manufacturer	Type	Specification	Number	Material number	Remark
26		Terminal board	HOLLEYWELL	6mm²	-	6	YE60000603200	
27		Terminal board	HOLLEYWELL	6mm²PE	-	1	YE60000603500	
28		Terminal board	HOLLEYWELL	4mm²	-	9	YE60000403200	
29		Terminal board	HOLLEYWELL	4mm²PE	-	3	YE60000403500	
30		Terminal board	HOLLEYWELL	2.5mm²	-	8	YE60002503200	
31		Terminal board	HOLLEYWELL	2.5mm²PE	-	1	YE60002503400	
32		Terminal board	HOLLEYWELL	2.5mm²	-	2	YE60002503200	(2)
33	X2	Terminal board	HOLLEYWELL	2.5mm²	-	4	YE60002503200	
34		Terminal board	HOLLEYWELL	2.5mm²PE	-	1	YE60002503400	
35	FM	Fan	SUNON	DP-200A	230VAC 40W	1	-----	(1)
36	M1	Blower	SHINI	-----	400V 7.5kW	1	-----	(1)
37	M2	Blower	SHINI	-----	400V 1.5kW	1	-----	(1)
38	M3	Motor	----	-----	230V 0.015kW	1	-----	(1)
39	EH1	Pipe heater	SHINI	-----	400V 24kW	1	-----	(1)
40	EH2	Pipe heater	SHINI	-----	400V 10kW	1	-----	(1)
41	S10	Communication interface board RS-485 (double Dsub-9pin connector)	--	--	--	1	YE90048501200	
42		Shell RS485(SAL-700G-A-19)0	--	--	--	1	YR40048500000	
43		Terminal block E/GKseries(honeywell)			PCS	5	YE60000003900	

整机版本Ver.D

Notes: (1)Means it's not the material inside the control box. (2)Stands for optional dew-point monitor

Mark	Before modification	After modification	Modified by	Modify date

Drawer		Version	E
Designer		Approved by	
Proofread by			
Checked by		Date	20170929

Title: SDD-900U/700H Electrical Components List 2

Drawing NO.: SDD-900U/700H-CE-400V-E-6

SHINI 信易電熱機械股份有限公司 Shini Plastics Technologies, Inc.

Scale	
Standard	CE
Page	6
Totally	6 Pages
Voltage	400V
Frequency	50Hz

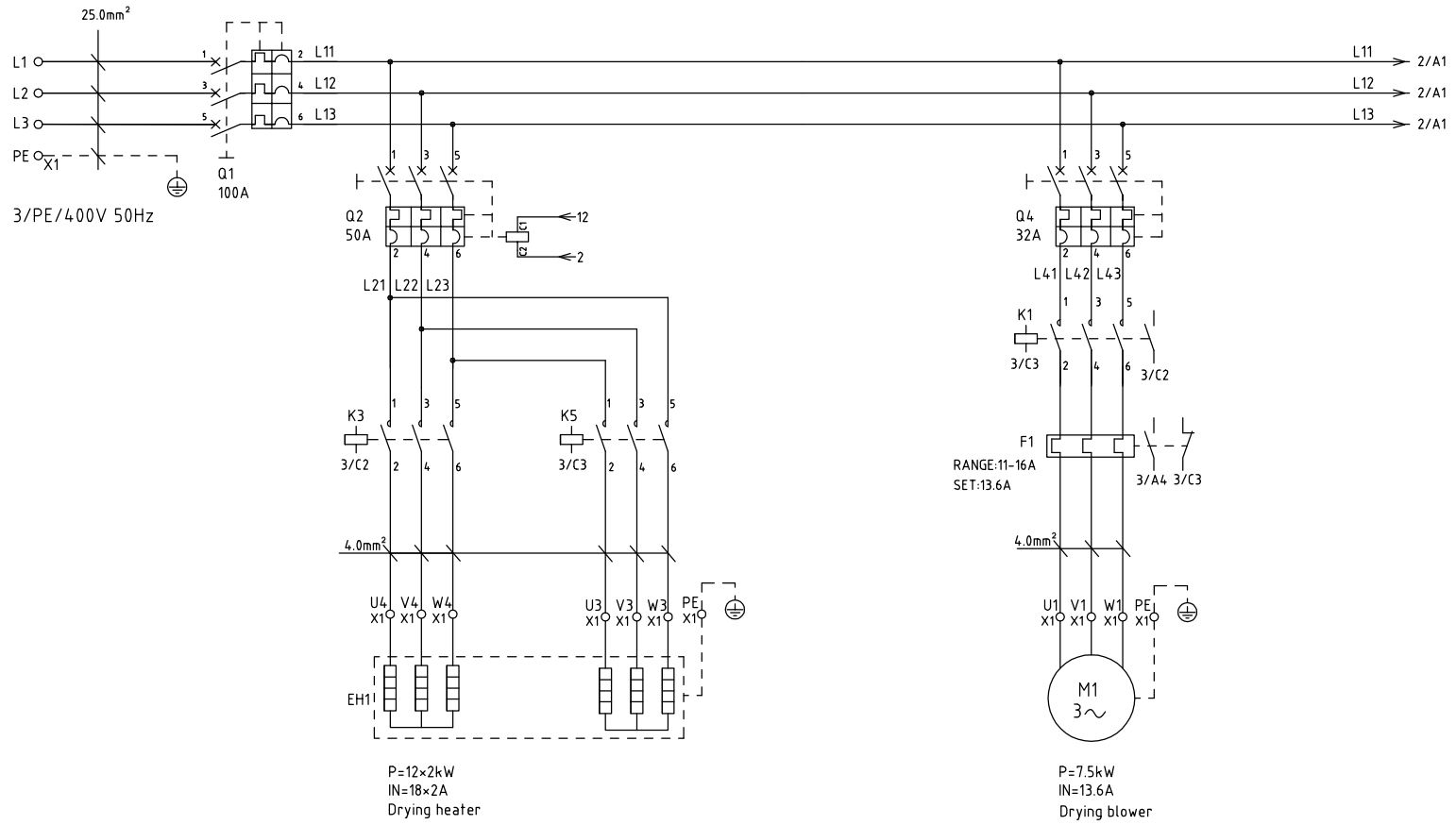

整机版本Ver.F

					Drawer		Version	E	Title: SDD-1200U/700H Main Circuit Diagram 1	Drawing NO.: SDD-1200U/700H-CE-400V-E-1	Scale	Page 1
					Designer		Approved by				Standard CE	Totally 6 Pages
					Proofread by				信易電熱機械股份有限公司 Shini Plastics Technologies, Inc.		Voltage	400V
Mark	Before modification	After modification	Modified by	Modify date	Checked by		Date	20170929			Frequency	50Hz

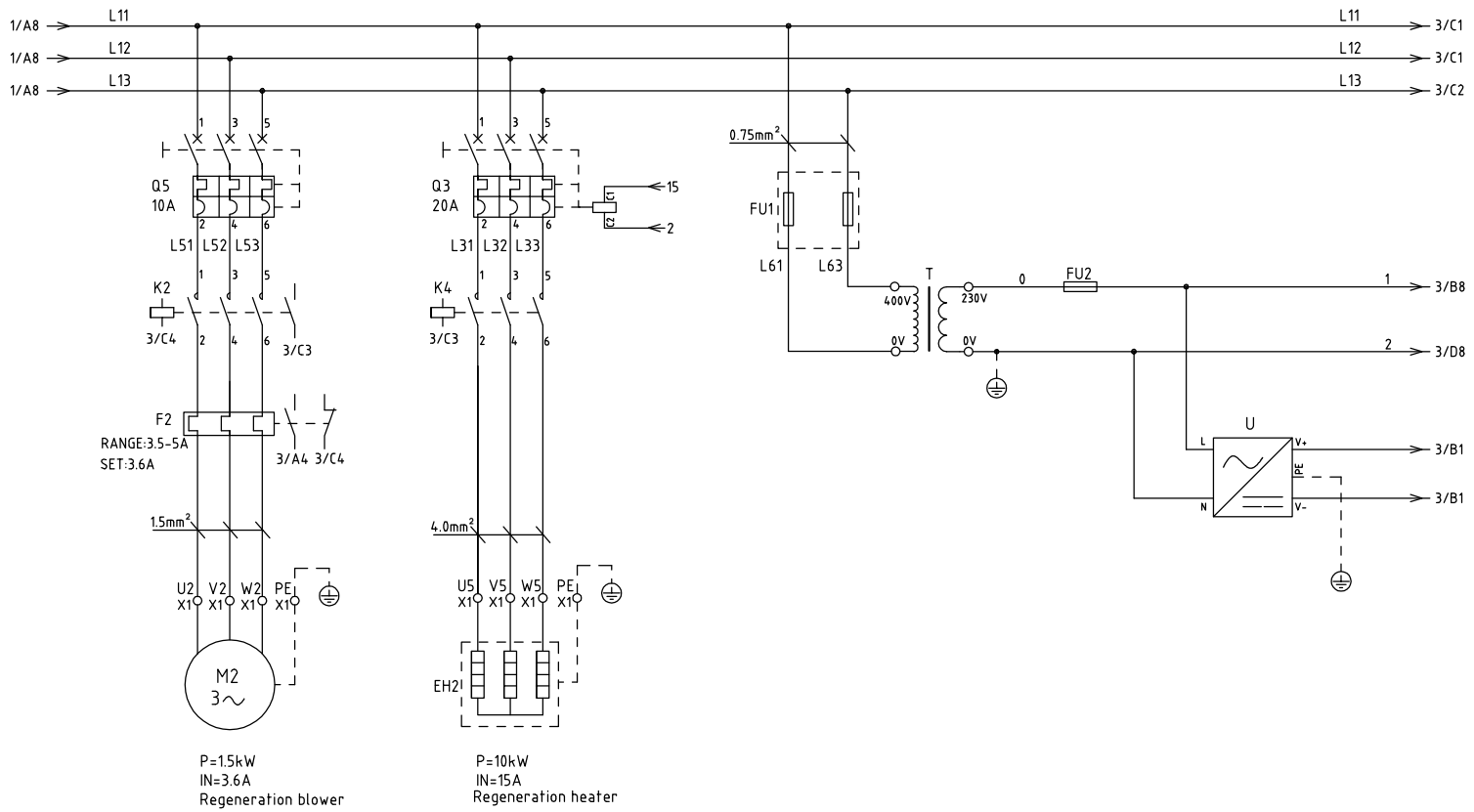

整机版本Ver.F

					Drawer		Version	E	Title: SDD-1200U/700H Main Circuit Diagram 2	Drawing NO. SDD-1200U/700H-CE-400V-E-2	Scale		Page 2
					Designer		Approved by				Standard	CE	Totally 6 Pages
					Proofread by				信易電熱機械股份有限公司 Shini Plastics Technologies, Inc.		Voltage	400V	
Mark	Before modification	After modification	Modified by	Modify date	Checked by		Date	20170929			Frequency	50Hz	

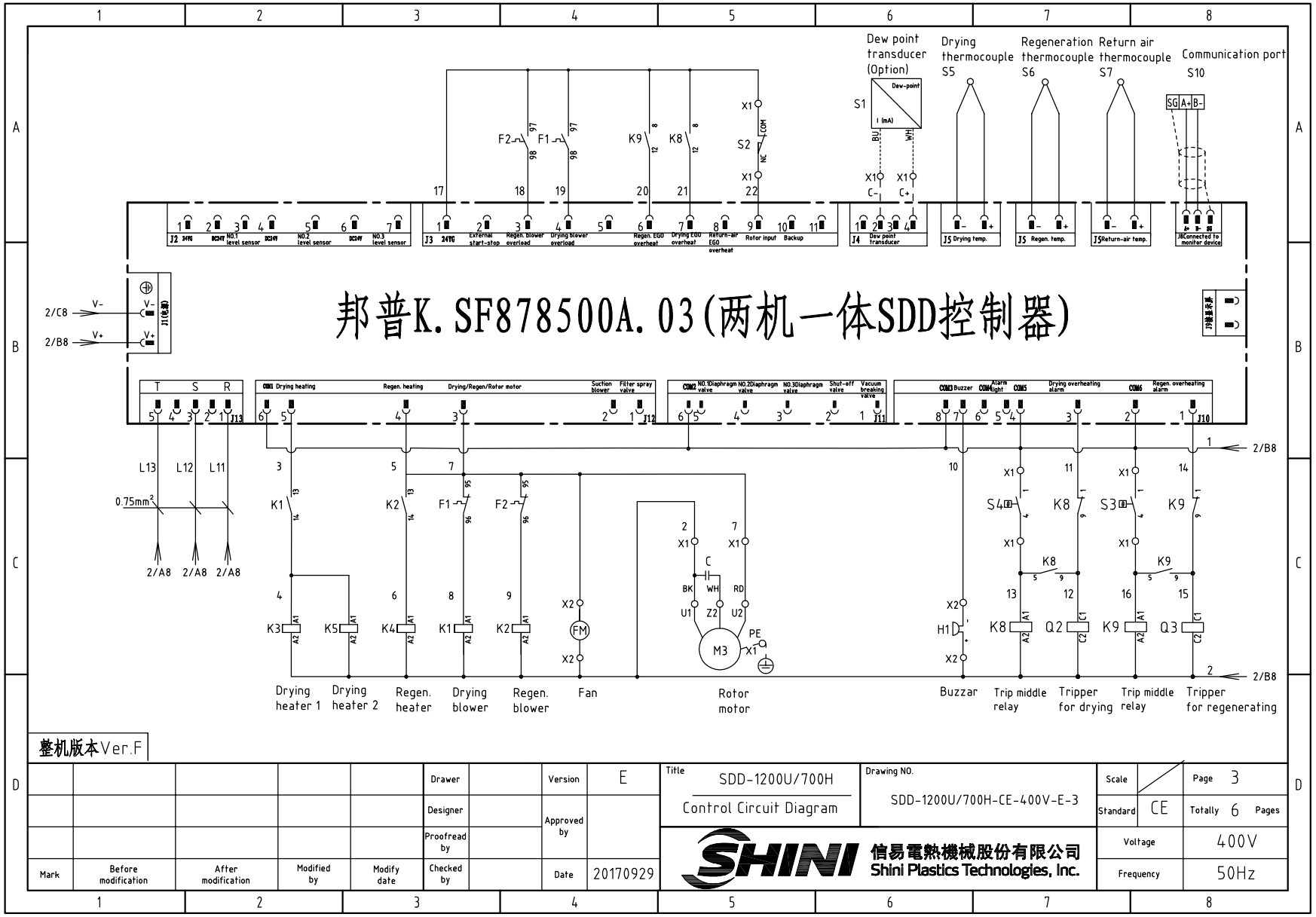

整机版本Ver.F

					Drawer		Version	E	Title: SDD-1200U/700H Control Circuit Diagram	Drawing NO. SDD-1200U/700H-CE-400V-E-3	Scale	Page 3
					Designer		Approved by				Standard CE	Totally 6 Pages
					Proofread by				信易電熱機械股份有限公司 Shini Plastics Technologies, Inc.		Voltage	400V
Mark	Before modification	After modification	Modified by	Modify date	Checked by		Date	20170929			Frequency	50Hz

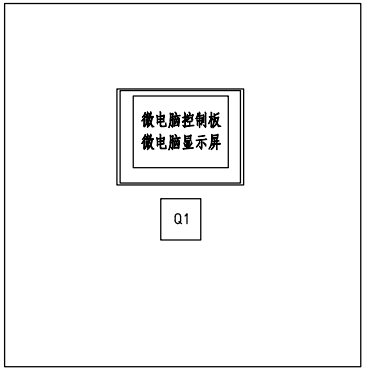

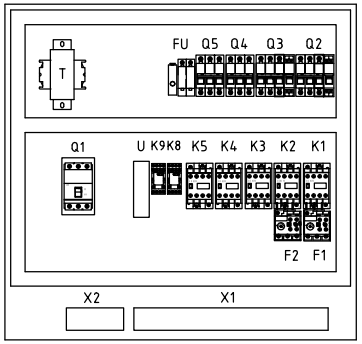

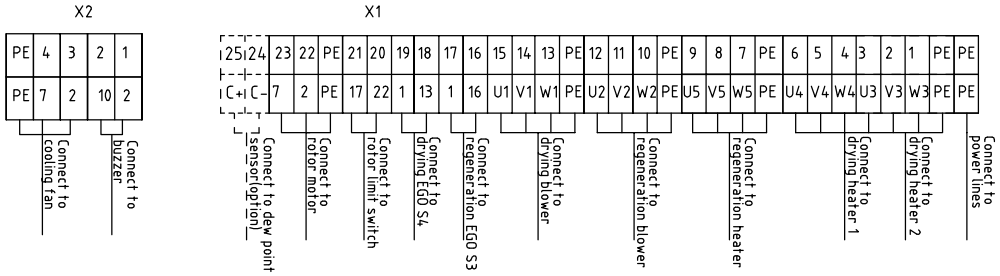

整机版本Ver.F

					Drawer		Version	E	Title: SDD-1200U/700H Electrical Components Layout	Drawing NO.: SDD-1200U/700H-CE-400V-E-4	Scale		Page 4
					Designer		Approved by				Standard	CE	Totally 6 Pages
					Proofread by				信易電熱機械股份有限公司 Shini Plastics Technologies, Inc.		Voltage	400V	
Mark	Before modification	After modification	Modified by	Modify date	Checked by		Date	20170929			Frequency	50Hz	

NO.	Symbol	Name	Manufacturer	Type	Specification	Number	Material number	Remark
1	Q1	Breaker interlock	ABB	A1A125TMF100	100A	1	YE41110200000	
2	Q2	Circuit-breaker	TECO	BM-63C/3050S 3P	50A	1	YE40305003000	
3	Q3	Circuit-breaker	TECO	BM-63C/3020S 3P	20A	1	YE40302003000	
4	Q4	Circuit-breaker	TECO	BM-63C/3032S 3P	32A	1	YE40303203000	
5	Q5	Circuit-breaker	TECO	BM-63C/3010S 3P	10A	1	YE40301003000	
6		Excitation release	CHINT	MX	220V 50/60Hz	2	YE40023560000	
7	K1	Contactor	SIEMENS	3RT6026-1AN20	25A 220V 50/60Hz	1	YE00602622000	
8	K2	Contactor	SIEMENS	3RT6016-1AN21	9A 220V 50/60Hz	1	YE00601621000	
9	K3 K5	Contactor	SIEMENS	3RT6027-1AN21	32A 220V 50/60Hz	2	YE00602722000	
10	K4	Contactor	SIEMENS	3RT6026-1AN21	25A 220V 50/60Hz	1	YE00602622000	
11	K8 K9	Relay	WEIDMULLER	DRM270730LT	220V 50/60Hz	2	YE03270700000	
12	F1	Overload relay	SIEMENS	3RU6126-4AB0	11-16A	1	YE01260110000	
13	F2	Overload relay	SIEMENS	3RU6116-1FB0	3.5-5A	1	YE01160350000	
14	PCB	Controller	PUMP	K.SF878500A.03	-----	1	YE80878500100	
15	U	DC power	MEAN WELL	ESA-35-24	OUT=DC24V 1.5A	1	YE71352400100	
16	FU1	Fuse base	CHINT	RT28-32	2P	1	YE41032200000	
17		Fuse	CHINT	10×38 500V	2A	2	YE46002000100	
18	FU2	Fuse	YINDA	FS-10	2A	1	YE41001000000	
19	T	Transformer	BAIYUN	BY-0407009	IN=400V OUT=230V 500mA	1	YE70402300800	
20	H1	Buzzer	HITPOINT	PK-35A	220VAC	1	YE84003500200	
21	S1	Dew-point transducer	CS	CS 217-OEM	POWER=24VDC OUT=4-20mA	1	YE90021700100	(2)
22	S2	Micro switch	TEND	YBLXW-5/11G2	250V 5(4)A	1	----------	(1)
23	S3 S4	Temperature protector	EGO	---	115-320 °C	2	----------	(1)
24	S5 S6 S7	Thermocouple	SHINI	ST-K	K	3	---	(1)
25	X1	Terminal board	HOLLEYWELL	35mm²PE	-	1	YE60003503500	

整机版本Ver.F

Notes: (1)Means it's not the material inside the control box. (2)Stands for optional dew-point monitor

Mark	Before modification	After modification	Modified by	Modify date

Drawer		Version	E
Designer		Approved by	
Proofread by			
Checked by		Date	20170929

Title: SDD-1200U/700H
Electrical Components List 1

Drawing NO.: SDD-1200U/700H-CE-400V-E-5

信易電熱機械股份有限公司
Shini Plastics Technologies, Inc.

Scale		Page	5
Standard	CE	Totally	6 Pages
Voltage	400V		
Frequency	50Hz		

NO.	Symbol	Name	Manufacturer	Type	Specification	Number	Material number	Remark
26		Terminal board	HOLLEYWELL	6mm²	-	6	YE60000603200	
27		Terminal board	HOLLEYWELL	6mm²PE	-	1	YE60000603500	
28		Terminal board	HOLLEYWELL	4mm²	-	9	YE60000403200	
29		Terminal board	HOLLEYWELL	4mm²PE	-	3	YE60000403500	
30		Terminal board	HOLLEYWELL	2.5mm²	-	8	YE60002503200	
31		Terminal board	HOLLEYWELL	2.5mm²PE	-	1	YE60002503400	
32		Terminal board	HOLLEYWELL	2.5mm²	-	2	YE60002503200	(2)
33	X2	Terminal board	HOLLEYWELL	2.5mm²	-	4	YE60002503200	
34		Terminal board	HOLLEYWELL	2.5mm²PE	-	1	YE60002503400	
35	FM	Fan	SUNON	DP-200A	230VAC 40W	1	-----	(1)
36	M1	Blower	SHINI	-----	400V 7.5kW	1	-----	(1)
37	M2	Blower	SHINI	-----	400V 1.5kW	1	-----	(1)
38	M3	Motor	----	-----	230V 0.015kW	1	-----	(1)
39	EH1	Pipe heater	SHINI	-----	400V 24kW	1	-----	(1)
40	EH2	Pipe heater	SHINI	-----	400V 10kW	1	-----	(1)
41	S10	Communication interface board RS-485 (double Dsub-9pin connector)	--	--	--	1	YE90048501200	
42		Shell RS485(SAL-700G-A-19)0	--	--	--	1	YR40048500000	
43		Terminal block E/GKseries(honeywell)			PCS	5	YE60000003900	

整机版本Ver.F

Notes: (1)Means it's not the material inside the control box. (2)Stands for optional dew-point monitor

Mark	Before modification	After modification	Modified by	Modify date

Drawer		Version	E
Designer		Approved by	
Proofread by			
Checked by		Date	20170929

Title: SDD-1200U/700H
Electrical Components List 2

Drawing NO.: SDD-1200U/700H-CE-400V-E-6

信易電熱機械股份有限公司
Shini Plastics Technologies, Inc.

Scale		Page	6
Standard	CE	Totally	6 Pages
Voltage	400V		
Frequency	50Hz		