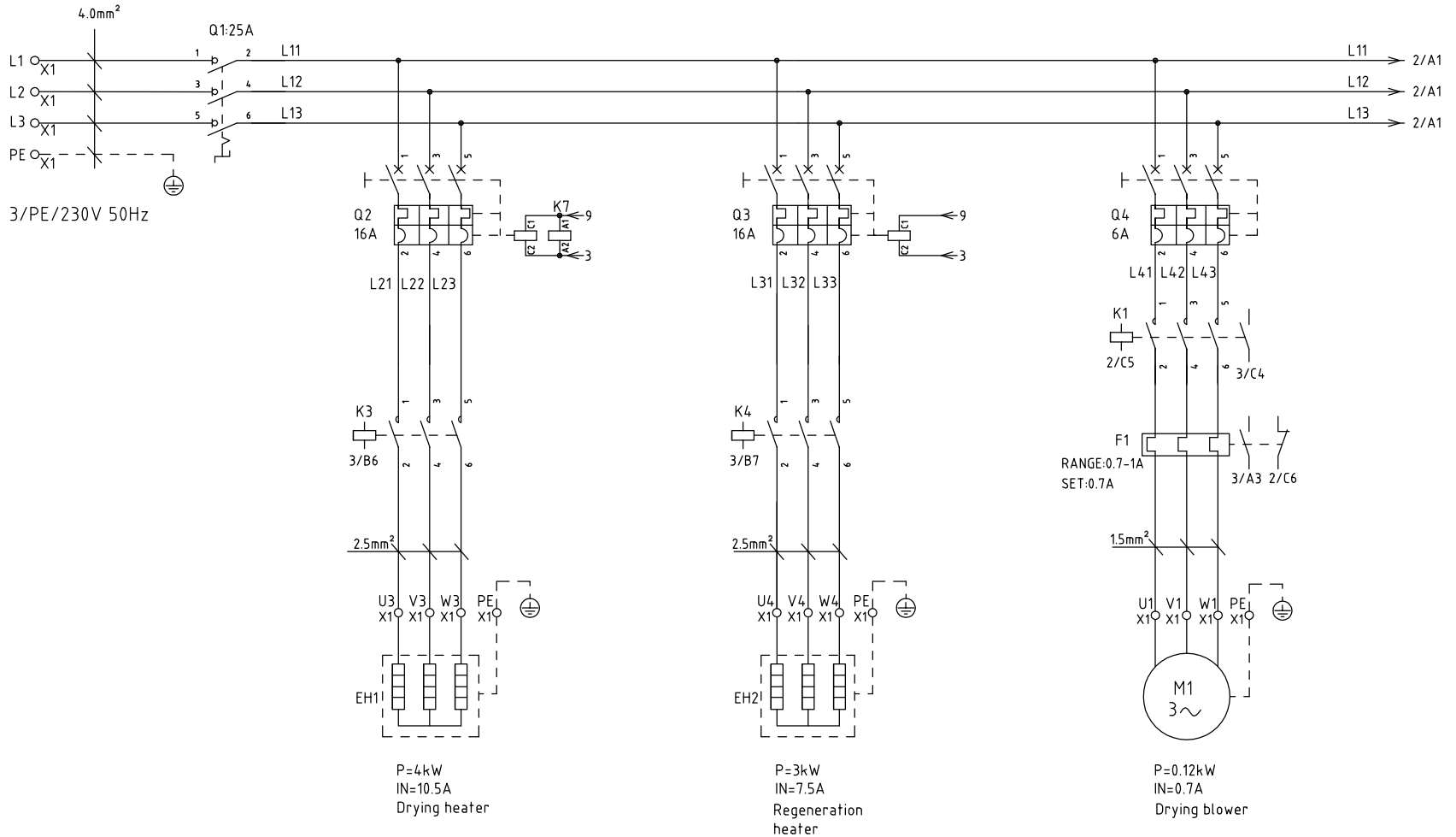

版本 Ver.C

					Drawer		Version	D	Title SDD-20U(40U)(80U)/40H-LC Main Circuit Diagram 1	Drawing NO. SDD-20U(40U)(80U)/40H-LC-CE-230V-D-1	Scale	Page 1
					Designer		Approved by				Standard CE	Totally 7 Pages
					Proofread by				信易電熱機械股份有限公司 Shini Plastics Technologies, Inc.		Voltage	230V
Mark	Before modification	After modification	Modified by	Modify date	Checked by		Date	20160816			Frequency	50Hz

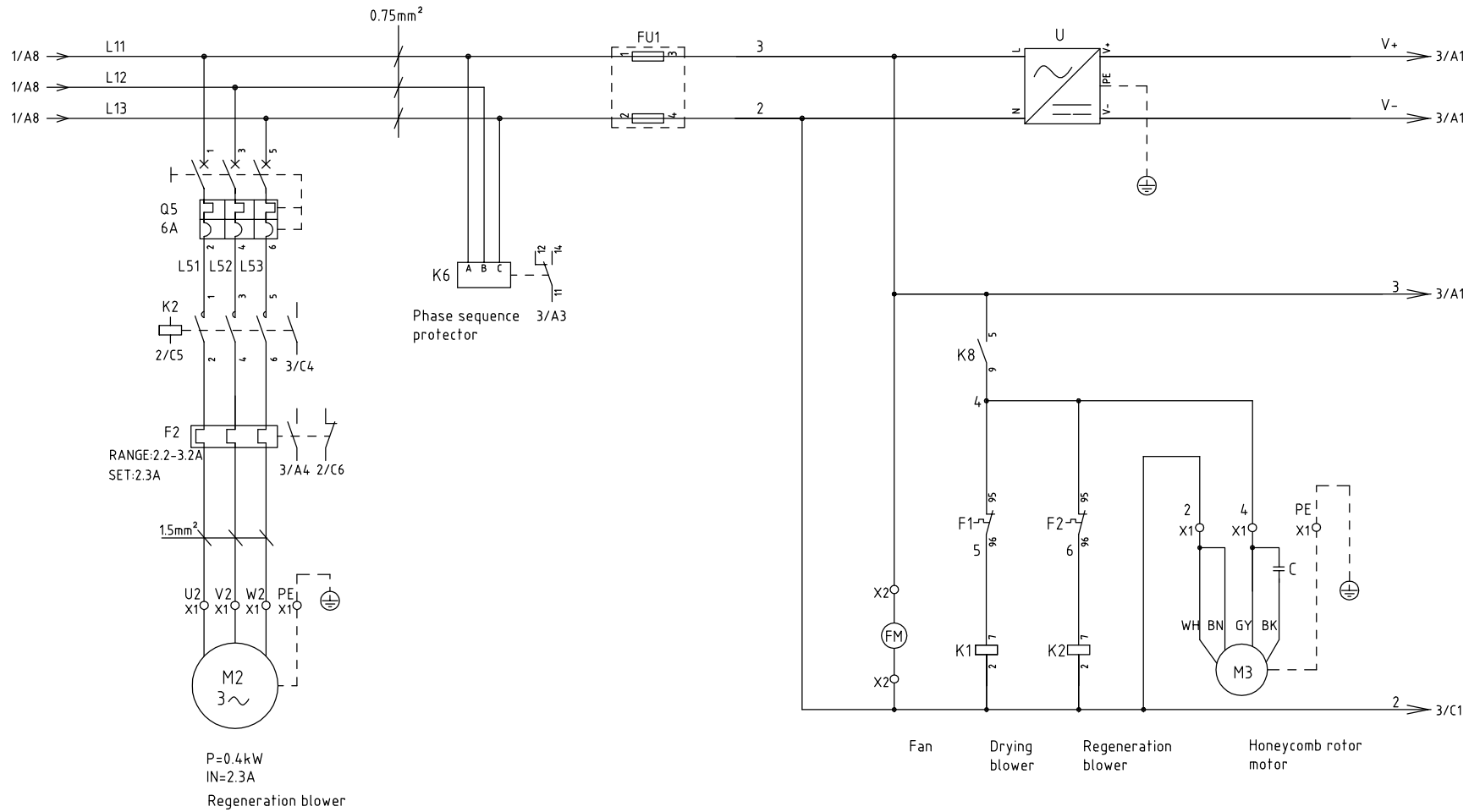

版本 Ver.C

					Drawer		Version	D
					Designer		Approved by	
					Proofread by			
Mark	Before modification	After modification	Modified by	Modify date	Checked by		Date	20160816

Title: SDD-20U(40U)(80U)/40H-LC
Main Circuit Diagram 2

Drawing NO.: SDD-20U(40U)(80U)/40H-LC-CE-230V-D-2

Scale: /
Standard: CE
Page 2
Totally 7 Pages
Voltage: 230V
Frequency: 50Hz

信易電熱機械股份有限公司
Shini Plastics Technologies, Inc.

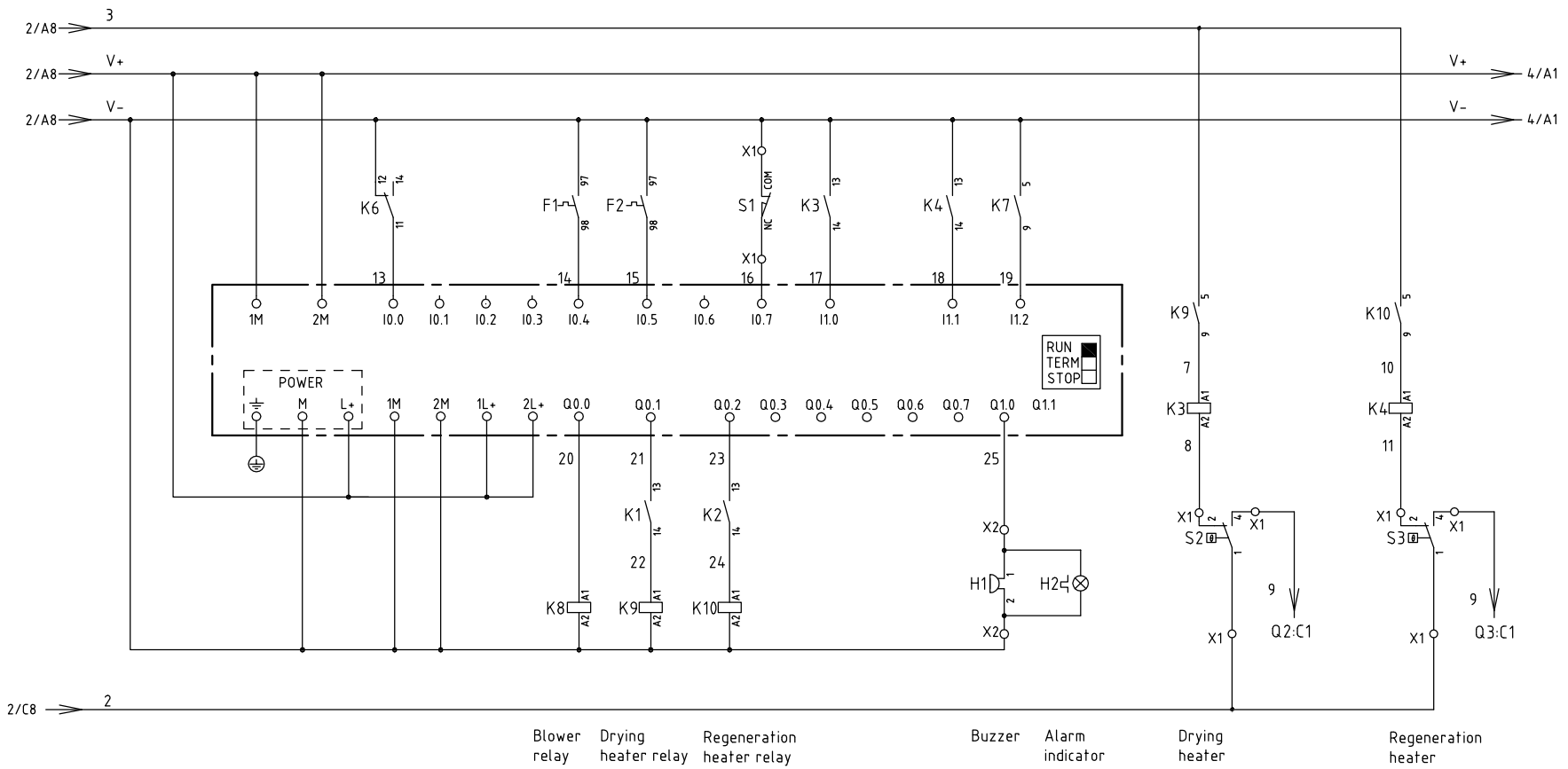

版本 Ver.C

					Drawer		Version	D	Title SDD-20U(40U)(80U)/40H-LC Control Circuit Diagram 1	Drawing NO. SDD-20U(40U)(80U)/40H-LC-CE-230V-D-3	Scale	Page 3
					Designer		Approved by				Standard CE	Totally 7 Pages
					Proofread by				信易電熱機械股份有限公司 Shini Plastics Technologies, Inc.		Voltage	230V
Mark	Before modification	After modification	Modified by	Modify date	Checked by		Date	20160816			Frequency	50Hz

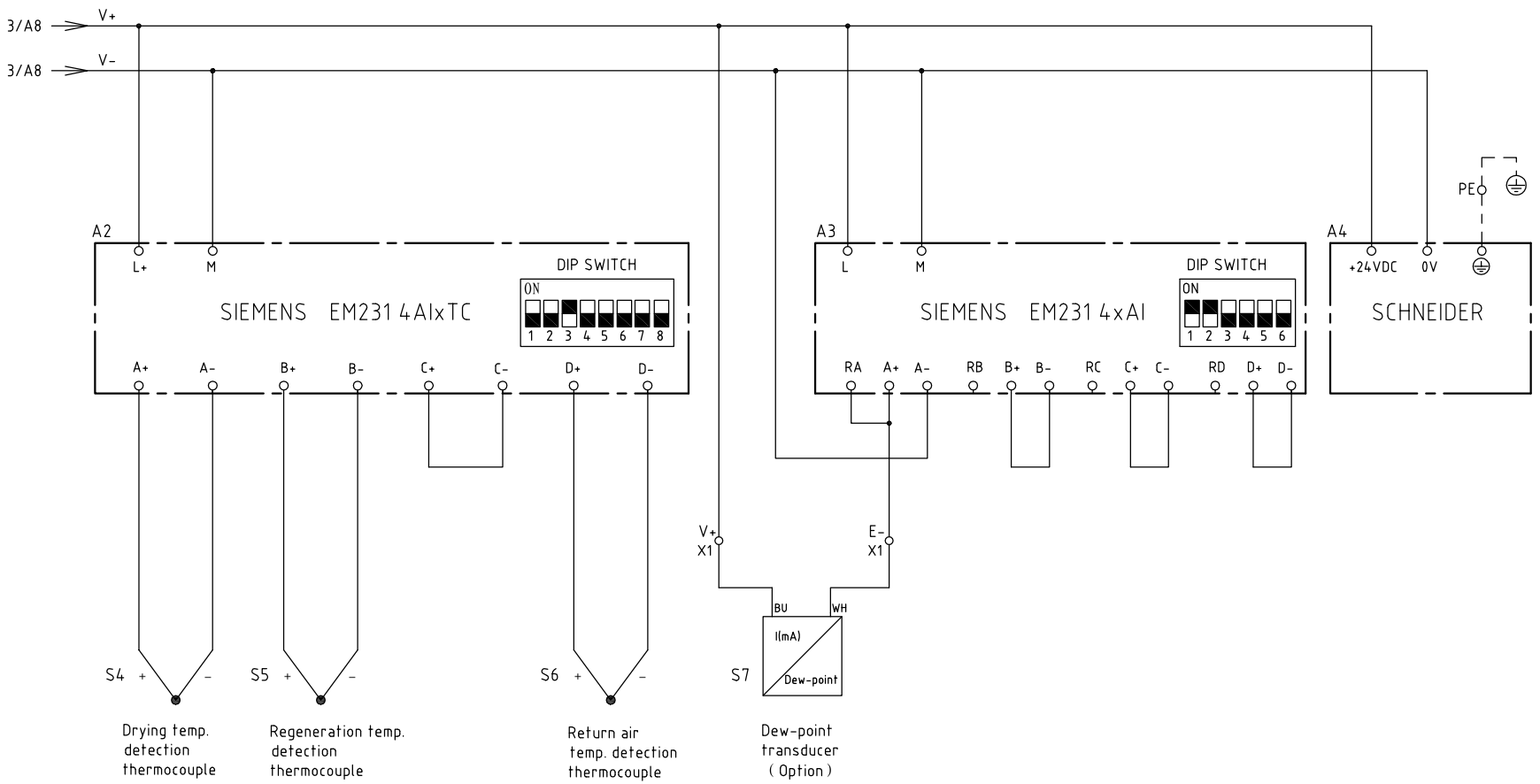

版本 Ver.C

Mark	Before modification	After modification	Modified by	Modify date	Drawer		Version	D
					Designer		Approved by	
					Proofread by			
					Checked by		Date	20160816

Title: SDD-20U(40U)(80U)/40H-LC
Control Circuit Diagram 2

Drawing NO.: SDD-20U(40U)(80U)/40H-LC-CE-230V-D-4

Scale: /
Standard: CE
Page 4
Totally 7 Pages
Voltage: 230V
Frequency: 50Hz

信易電熱機械股份有限公司
Shini Plastics Technologies, Inc.

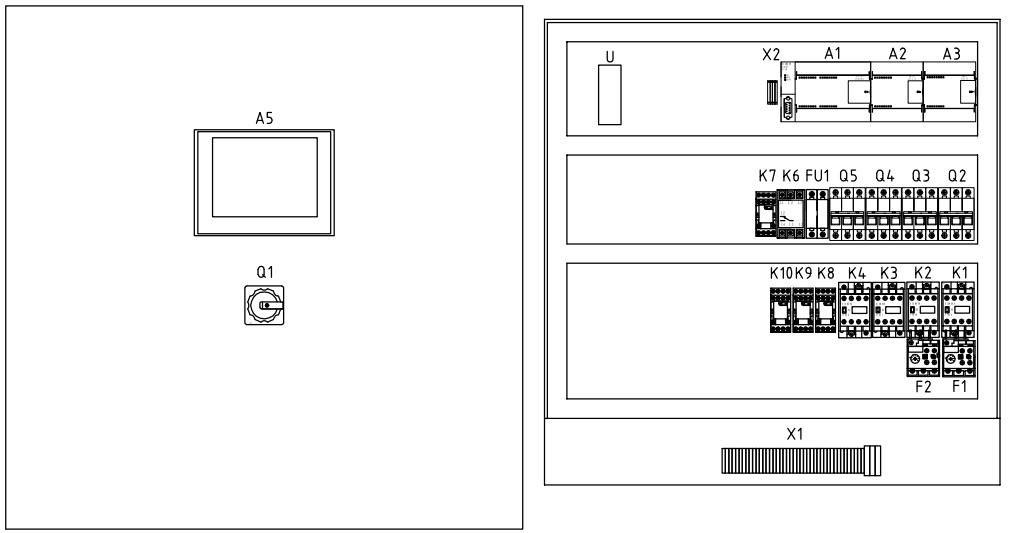

X2

PE	4	3	2	1
PE	3	2	V-	25

Connect to cooling fan

Connect to alarm indicator/buzzer

X1

27	26	25	24	23	22	21	20	19	18	17	16	15	14	13	PE	12	11	10	PE	9	8	7	PE	6	5	4	PE	3	2	1	PE
V+	E-	V-	16	11	9	2	2	8	9	4	2	U1	V1	W1	PE	U2	V2	W2	PE	U4	V4	W4	PE	U3	V3	W3	PE	L1	L2	L3	PE

Connect to dew-point transducer(Option)

Connect to rotor micro switch

Connect to temperature protector

Connect to temperature protector

Connect to honeycomb rotor motor

Connect to drying blower

Connect to regeneration blower

Connect to regeneration heater

Connect to drying heater

Connect to power lines

版本 Ver.C

					Drawer		Version	D
					Designer		Approved by	
					Proofread by			
Mark	Before modification	After modification	Modified by	Modify date	Checked by		Date	20160816

Title: SDD-20U(40U)(80U)/40H-LC

Electrical Components Layout

Drawing NO.: SDD-20U(40U)(80U)/40H-LC-CE-230V-D-5

SHINI 信易電熱機械股份有限公司 Shini Plastics Technologies, Inc.

Scale		Page	5
Standard	CE	Totally	7 Pages
Voltage	230V		
Frequency	50Hz		

NO.	Symbol	Name	Manufacturer	Type	Specification	Number	Material number	Remark
1	Q1	Main switch	MOELLER	P1-25/EA/SVB	25A	1	YE10125250000	
2	Q2	Circuit-breaker	TECO	BM-63C/3016S	16A	1	YE40301603000	
3	Q3	Circuit-breaker	TECO	BM-63C/3016S	16A	1	YE40301603000	
4		Excitation release	TECO	MX	220V 50/60Hz	2	YE40023560000	
5	Q4	Circuit-breaker	TECO	BM-63C/3006S	6A	1	YE40300603000	
6	Q5	Circuit-breaker	TECO	BM-63C/3006S	6A	1	YE40300603000	
7	K1	Contactor	SIEMENS	3RT6016-1AN21	220V 50/60Hz	1	YE00601621000	
8	K2	Contactor	SIEMENS	3RT6016-1AN21	220V 50/60Hz	1	YE00601621000	
9	K3	Contactor	SIEMENS	3RT6018-1AN21	220V 50/60Hz	1	YE00601821000	
10	K4	Contactor	SIEMENS	3RT6018-1AN21	220V 50/60Hz	1	YE00601821000	
11	K6	Phase relay	CHAOSHI	ABJ-10W	220V 50/60Hz	1	YE03102200000	
12	K7	Middle relay	WEIDMULLER	DRM270730LT	220V 50/60Hz	1	YE03270700000	
13	K8 K9 K10	Middle relay	WEIDMULLER	DRM270724LT	24V DC	3	YE03272400000	
14	F1	Thermo overload relay	SIEMENS	3RU6116-0JB0	0.7-1A	1	YE01160700000	
15	F2	Thermo overload relay	SIEMENS	3RU6116-1DB0	2.2-3.2A	1	YE01160220000	
16	A1	PLC	SIEMENS	CPU224 DC/DC/DC	24VDC	1	YE81022400000	
17	A2	PLC Analog module	SIEMENS	EM231 4xTC	--	1	YE82023100100	
18	A3	PLC Analog module	SIEMENS	EM231 4xAI	--	1	YE82023100000	(2)
19	A4	Human-machine interface	SCHNEIDER	GXO3501	24VDC	1	YE80350100100	
20	FU1	Fuse base	CHINT	RT18-32	2P	1	YE41032200000	
21		Fuse	CHINT	10×38 500V	2A	2	YE46002000100	
22	U	DC power	MEAN WELL	NES-35-24	OUT=DC24V 1.5A	1	YE71352400100	
23	H1	Buzzer	HITPOINT	PK-27A	24VDC	1	YE84002700000	(1)
24	H2	Alarm indicator	SHINI	LED-3051	24VDC	1	YE83305100300	(1)
25	S1	Micro switch	TEND	LXW5-11G1	250V 5(4)A	1	YE14511100000	(1)

版本 Ver.C

Notes: (1)Means it's not the material inside the control box. (2)Stands for optional.

Mark	Before modification	After modification	Modified by	Modify date

Drawer		Version	D
Designer		Approved by	
Proofread by			
Checked by		Date	20160816

Title: SDD-20U(40U)(80U)/40H-LC
Electrical Components List 1

Drawing NO.: SDD-20U(40U)(80U)/40H-LC-CE-230V-D-6

Scale: /
Standard: CE
Page 6
Totally 7 Pages
Voltage: 230V
Frequency: 50Hz

信易電熱機械股份有限公司
Shini Plastics Technologies, Inc.

NO.	Symbol	Name	Manufacturer	Type	Specification	Number	Material number	Remark
26	S2	Temperature protector	EGO	---	115-320 °C	1	BH90115000050	(1)
27	S3	Temperature protector	EGO	---	115-320 °C	1	BH90115000050	(1)
28	S4 S5 S6	Thermocouple	SHINI	ST-K	K	3	-----	(1)
29	S7	Dew-point transducer	CS	CS 217-OEM	POWER=24VDC OUT=4-20mA	1	YE90021700100	(1) (2)
30	X1	Terminal board	----	$4mm^2$	-	15	YE60000403200	
31				$4mm^2$PE	-	5	YE60000403500	
32				$2.5mm^2$	-	15	YE60002503200	
33				$2.5mm^2$PE	-	1	YE60002503400	
34	X2	Terminal board	----	$2.5mm^2$	-	4	YE60002503200	
35				$2.5mm^2$PE	-	1	YE60002503400	
36	FM	Fan	SUNON	DP-200A	230VAC 40W	1	YM60121200400	(1)
37	M1	Blower	SHINI	-----	0.12kW	1	-----	(1)
38	M2	Blower	SHINI	-----	0.4kW	1	-----	(1)
39	M3	Motor	----	-----	230V 0.015kW	1	-----	(1)
40	EH1	Pipe heater	SHINI	-----	4kW	1	-----	(1)
41	EH2	Pipe heater	SHINI	-----	3kW	1	-----	(1)

版本 Ver.C

Notes: (1)Means it's not the material inside the control box. (2)Stands for optional.

Mark	Before modification	After modification	Modified by	Modify date

Drawer		Version	D
Designer		Approved by	
Proofread by			
Checked by		Date	20160816

Title: SDD-20U(40U)(80U)/40H-LC
Electrical Components List 2

Drawing NO.: SDD-20U(40U)(80U)/40H-LC-CE-230V-D-7

Scale: /
Standard: CE
Page 7
Totally 7 Pages
Voltage: 230V
Frequency: 50Hz

信易電熱機械股份有限公司
Shini Plastics Technologies, Inc.

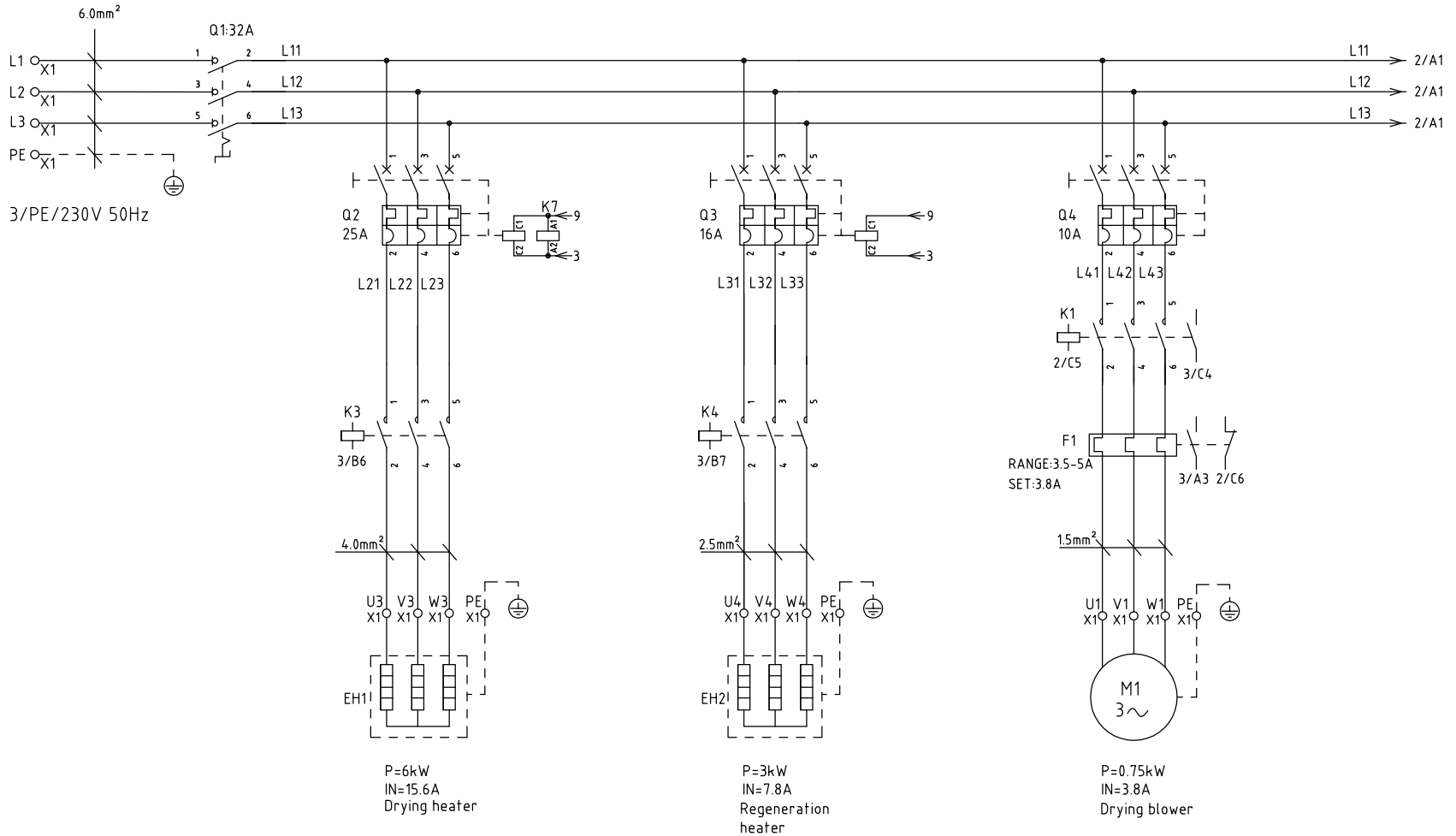

版本 Ver.C

Note:For 60Hz,the regenerative heater is 4kW

Mark	Before modification	After modification	Modified by	Modify date	Drawer		Version	C
					Designer		Approved by	
					Proofread by			
					Checked by		Date	20160816

Title: SDD-120U(160U)/80H-LC
Main Circuit Diagram 1

Drawing NO.: SDD-120U(160U)/80H-LC-CE-230V-C-1

Scale: /
Standard: CE
Page 1
Totally 7 Pages
Voltage: 230V
Frequency: 50Hz

信易電熱機械股份有限公司
Shini Plastics Technologies, Inc.

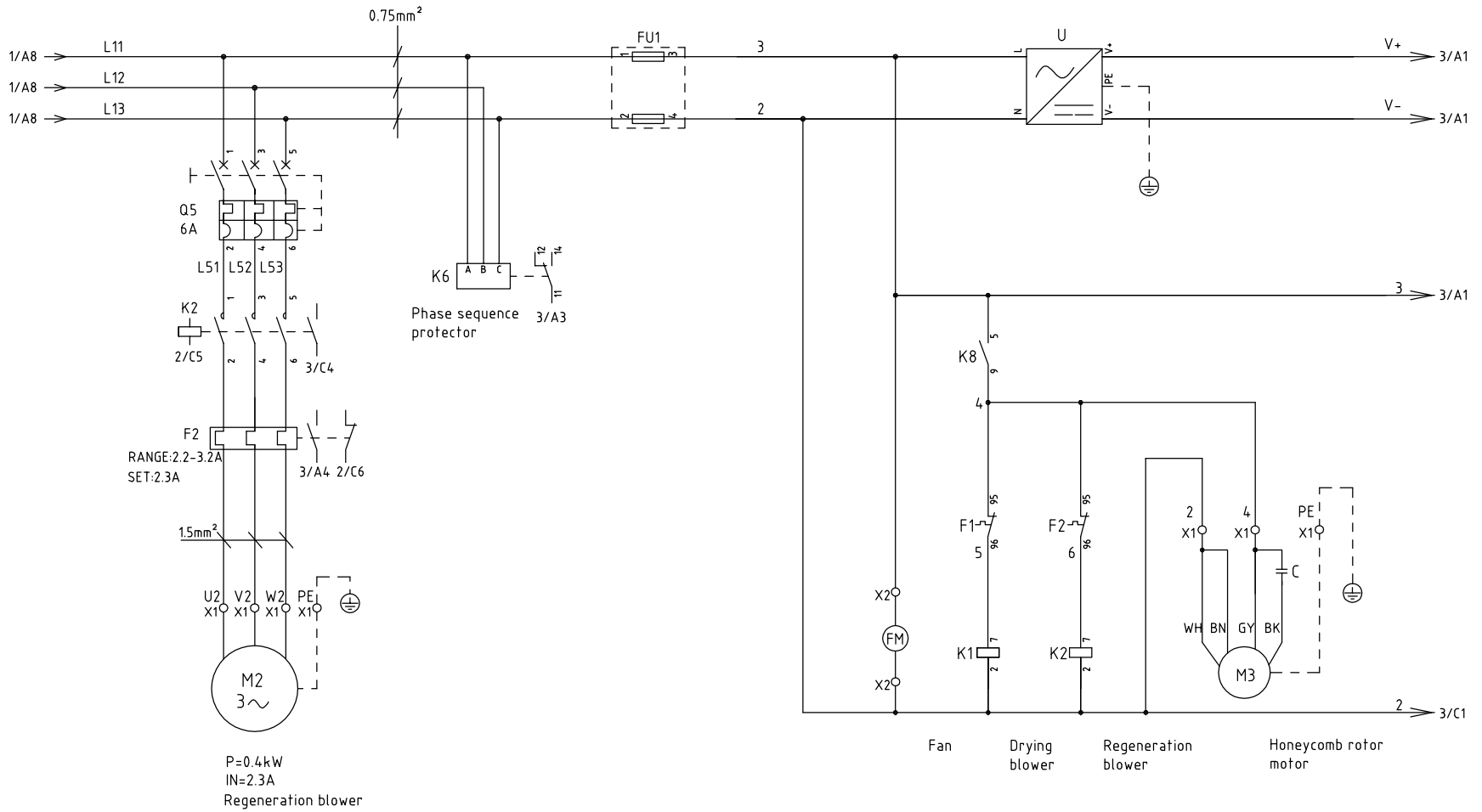

版本 Ver.C

					Drawer		Version	C	Title: SDD-120U(160U)/80H-LC Main Circuit Diagram 2	Drawing NO.: SDD-120U(160U)/80H-LC-CE-230V-C-2	Scale	Page 2
					Designer		Approved by				Standard CE	Totally 7 Pages
					Proofread by				信易電熱機械股份有限公司 Shini Plastics Technologies, Inc.		Voltage	230V
Mark	Before modification	After modification	Modified by	Modify date	Checked by		Date	20160816			Frequency	50Hz

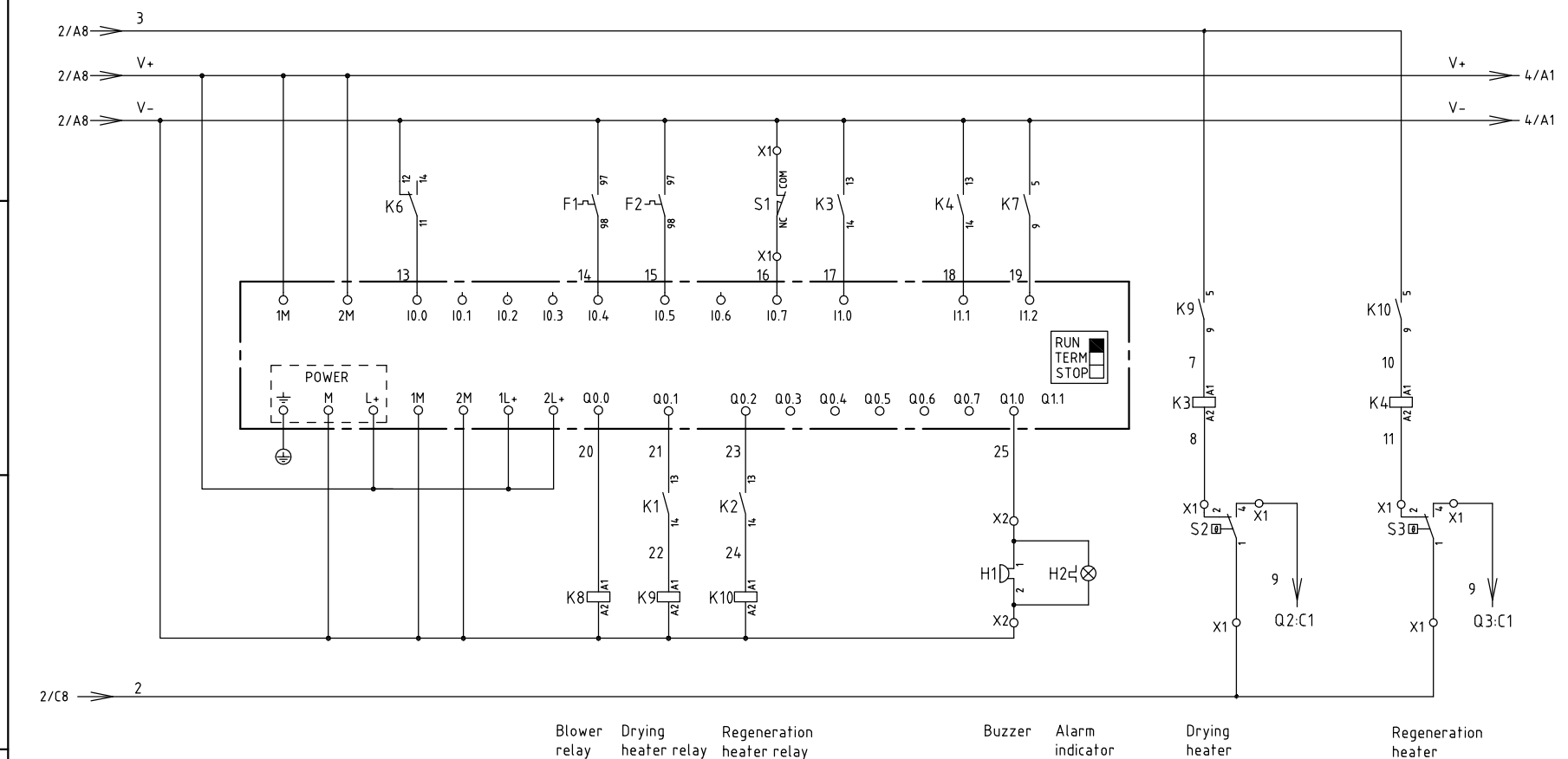

版本 Ver.C

					Drawer		Version	C	Title SDD-120U(160U)/80H-LC Control Circuit Diagram 1	Drawing NO. SDD-120U(160U)/80H-LC-CE-230V-C-3	Scale	Page 3
					Designer		Approved by				Standard CE	Totally 7 Pages
					Proofread by				SHINI 信易電熱機械股份有限公司 Shini Plastics Technologies, Inc.		Voltage	230V
Mark	Before modification	After modification	Modified by	Modify date	Checked by		Date	20160816			Frequency	50Hz

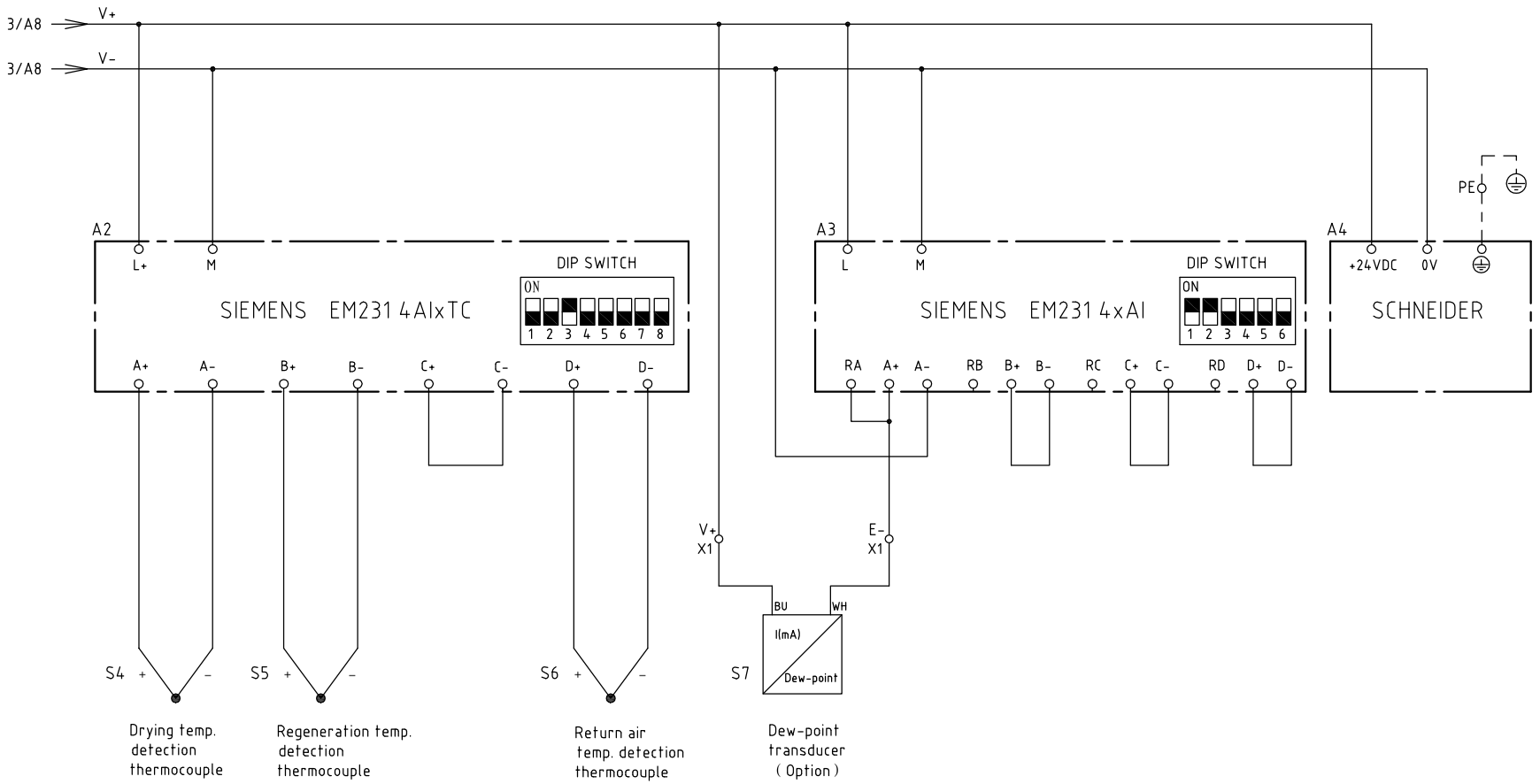

版本 Ver.C

					Drawer		Version	C	Title SDD-120U(160U)/80H-LC Control Circuit Diagram 2	Drawing NO. SDD-120U(160U)/80H-LC-CE-230V-C-4	Scale	Page 4
					Designer		Approved by				Standard CE	Totally 7 Pages
					Proofread by				信易電熱機械股份有限公司 Shini Plastics Technologies, Inc.		Voltage	230V
Mark	Before modification	After modification	Modified by	Modify date	Checked by		Date	20160816			Frequency	50Hz

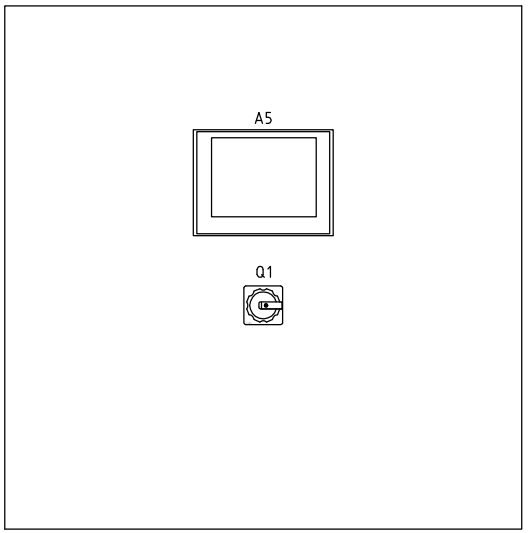

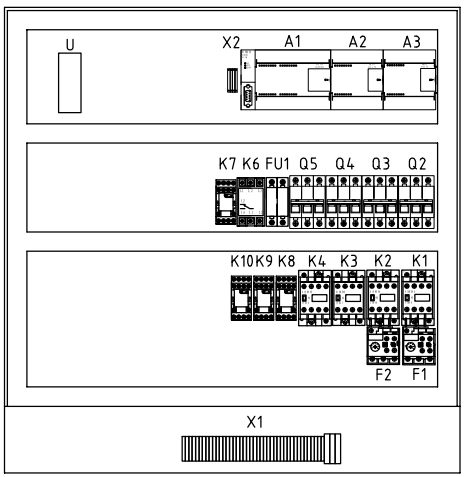

X2

PE	4	3	2	1
PE	3	2	V-	25

- 3: Connect to cooling fan
- 25: Connect to alarm indicator/buzzer

X1

27	26	25	24	23	22	21	20	19	18	17	16	15	14	13	PE	12	11	10	PE	9	8	7	PE	6	5	4	PE	3	2	1	PE
V+	E-	V-	16	11	9	2	2	8	9	4	2	U1	V1	W1	PE	U2	V2	W2	PE	U4	V4	W4	PE	U3	V3	W3	PE	L1	L2	L3	PE

- 26: Connect to transducer(Option)
- 25: Connect to dew-point rotor micro switch
- 24: Connect to temperature protector
- 19: Connect to temperature protector
- 16: Connect to honeycomb rotor motor
- 14: Connect to drying blower
- 11: Connect to regeneration blower
- 8: Connect to regeneration heater
- 5: Connect to drying heater
- 1: Connect to power lines

版本 Ver.C

					Drawer		Version	C	Title: SDD-120U(160U)/80H-LC Electrical Components Layout	Drawing NO.: SDD-120U(160U)/80H-LC-CE-230V-C-5	Scale	Page 5
					Designer		Approved by				Standard CE	Totally 7 Pages
					Proofread by				信易電熱機械股份有限公司 Shini Plastics Technologies, Inc.		Voltage	230V
Mark	Before modification	After modification	Modified by	Modify date	Checked by		Date	20160816			Frequency	50Hz

NO.	Symbol	Name	Manufacturer	Type	Specification	Number	Material number	Remark
1	Q1	Main switch	MOELLER	P1-32/EA/SVB	32A	1	YE10132320000	
2	Q2	Circuit-breaker	TECO	BM-63C 3P	25A	1	YE40302503000	
3	Q3	Circuit-breaker	TECO	BM-63C 3P	16A	1	YE40301603000	
4		Excitation release	CHINT	MX	220V 50/60Hz	2	YE40023560000	
5	Q4	Circuit-breaker	TECO	BM-63C 3P	10A	1	YE40301003000	
6	Q5	Circuit-breaker	TECO	BM-63C 3P	6A	1	YE40300603000	
7	K1	Contactor	SIEMENS	3RT6016-1AN21	220V 50/60Hz	1	YE00601621000	
8	K2	Contactor	SIEMENS	3RT6016-1AN21	220V 50/60Hz	1	YE00601621000	
9	K3	Contactor	SIEMENS	3RT6026-1AN20	220V 50/60Hz	1	YE00602622000	
10	K4	Contactor	SIEMENS	3RT6018-1AN21	220V 50/60Hz	1	YE00601800000	
11	K6	Phase relay	CHAOSHI	ABJ-10W	220V 50/60Hz	1	YE03102200000	
12	K7	Middle relay	WEIDMULLER	DRM270730LT	220V 50/60Hz	1	YE03270700000	
13	K8 K9 K10	Middle relay	WEIDMULLER	DRM270724LT	24VDC	3	YE03272400000	
14	F1	Thermo overload relay	SIEMENS	3RU6116-1FB0	3.5-5A	1	YE01160350000	
15	F2	Thermo overload relay	SIEMENS	3RU6116-1DB0	2.2-3.2A	1	YE01160220000	
16	A1	PLC	SIEMENS	CPU224 DC/DC/DC	24VDC	1	YE81022400000	
17	A2	PLC Analog module	SIEMENS	EM231 4xTC	--	1	YE82023100100	
18	A3	PLC Analog module	SIEMENS	EM231 4xAI	--	1	YE82023100000	(2)
19	A4	Human-machine interface	SCHNEIDER	GXO3501	24VDC	1	YE80350100100	
20	FU1	Fuse base	CHINT	RT18-32	2P	1	YE41032200000	
21		Fuse	CHINT	10×38 500V	2A	2	YE46002000100	
22	U	DC power	MEAN WELL	NES-35-24	OUT=DC24V 1.5A	1	YE71352400100	
23	H1	Buzzer	HITPOINT	PK-27A	24VDC	1	YE84002700000	(1)
24	H2	Alarm indicator	SHINI	LED-3051	24VDC	1	YE83305100300	(1)
25	S1	Micro switch	TEND	LXW5-11G1	250V 5(4)A	1	YE14511100000	(1)

版本 Ver.C

Notes: (1)Means it's not the material inside the control box. (2)Stands for optional.

Mark	Before modification	After modification	Modified by	Modify date

Drawer		Version	C
Designer		Approved by	
Proofread by			
Checked by		Date	20160816

Title: SDD-120U(160U)/80H-LC
Electrical Components List 1

Drawing NO.: SDD-120U(160U)/80H-LC-CE-230V-C-6

Scale: /
Standard: CE
Page 6
Totally 7 Pages
Voltage: 230V
Frequency: 50Hz

信易電熱機械股份有限公司
Shini Plastics Technologies, Inc.

NO.	Symbol	Name	Manufacturer	Type	Specification	Number	Material number	Remark
26	S2	Temperature protector	EGO	---	115-320 °C	1	BH90115000050	(1)
27	S3	Temperature protector	EGO	---	115-320 °C	1	BH90115000050	(1)
28	S4 S5 S6	Thermocouple	SHINI	ST-K	K	3	-----	(1)
29	S7	Dew-point transducer	CS	CS 217-OEM	POWER=24VDC OUT=4-20mA	1	YE90021700100	(1) (2)
30	X1	Terminal board	----	$6mm^2$	-	3	YE60000603200	
31				$6mm^2$PE	-	1	YE60000603500	
32				$4mm^2$	-	12	YE60000403200	
33				$4mm^2$PE	-	4	YE60000403500	
34				$2.5mm^2$	-	15	YE60002503200	
35				$2.5mm^2$PE	-	1	YE60002503400	
36	X2	Terminal board	----	$2.5mm^2$	-	4	YE60002503200	
37				$2.5mm^2$PE	-	1	YE60002503400	
38	FM	Fan	SUNON	DP-200A	230VAC 40W	1	YM60121200400	(1)
39	M1	Blower	SHINI	-----	230V 0.75kW	1	-----	(1)
40	M2	Blower	SHINI	-----	230V 0.4kW	1	-----	(1)
41	M3	Motor	----	-----	230V 0.015kW	1	-----	(1)
42	EH1	Pipe heater	SHINI	-----	230V 6kW	1	-----	(1)
43	EH2	Pipe heater	SHINI	-----	230V 3kW	1	----- **50Hz**	(1)
44	EH2	Pipe heater	SHINI	-----	400V 4kW	1	----- **60Hz**	(1)

版本 Ver.C

Notes: (1)Means it's not the material inside the control box. (2)Stands for optional.

Mark	Before modification	After modification	Modified by	Modify date

Drawer		Version	C
Designer		Approved by	
Proofread by			
Checked by		Date	20160816

Title: SDD-120U(160U)/80H-LC
Electrical Components List 2

Drawing NO.: SDD-120U(160U)/80H-LC-CE-230V-C-7

Scale: /
Standard: CE
Page 7
Totally 7 Pages
Voltage: 230V
Frequency: 50Hz

信易電熱機械股份有限公司
Shini Plastics Technologies, Inc.

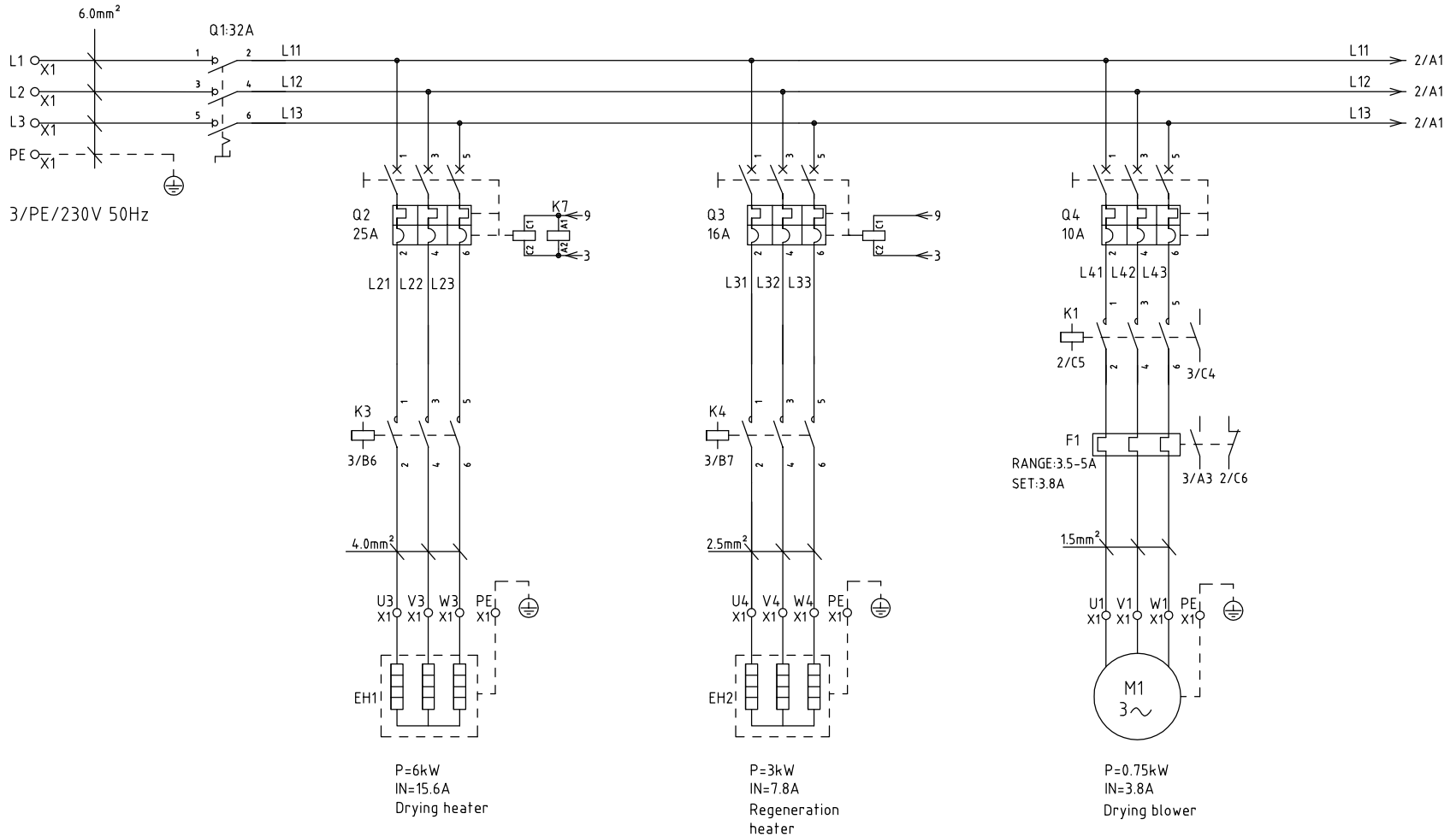

版本 Ver.C

Note:For 60Hz,the regenerative heater is 4kW

Mark	Before modification	After modification	Modified by	Modify date	Drawer		Version	C
					Designer		Approved by	
					Proofread by			
					Checked by		Date	20160816

Title: SDD-160U(230U)/120H-LC Main Circuit Diagram 1

Drawing NO.: SDD-160U(230U)/120H-LC-CE-230V-C-1

信易電熱機械股份有限公司
Shini Plastics Technologies, Inc.

Scale		Page	1
Standard	CE	Totally	7 Pages
Voltage	230V		
Frequency	50Hz		

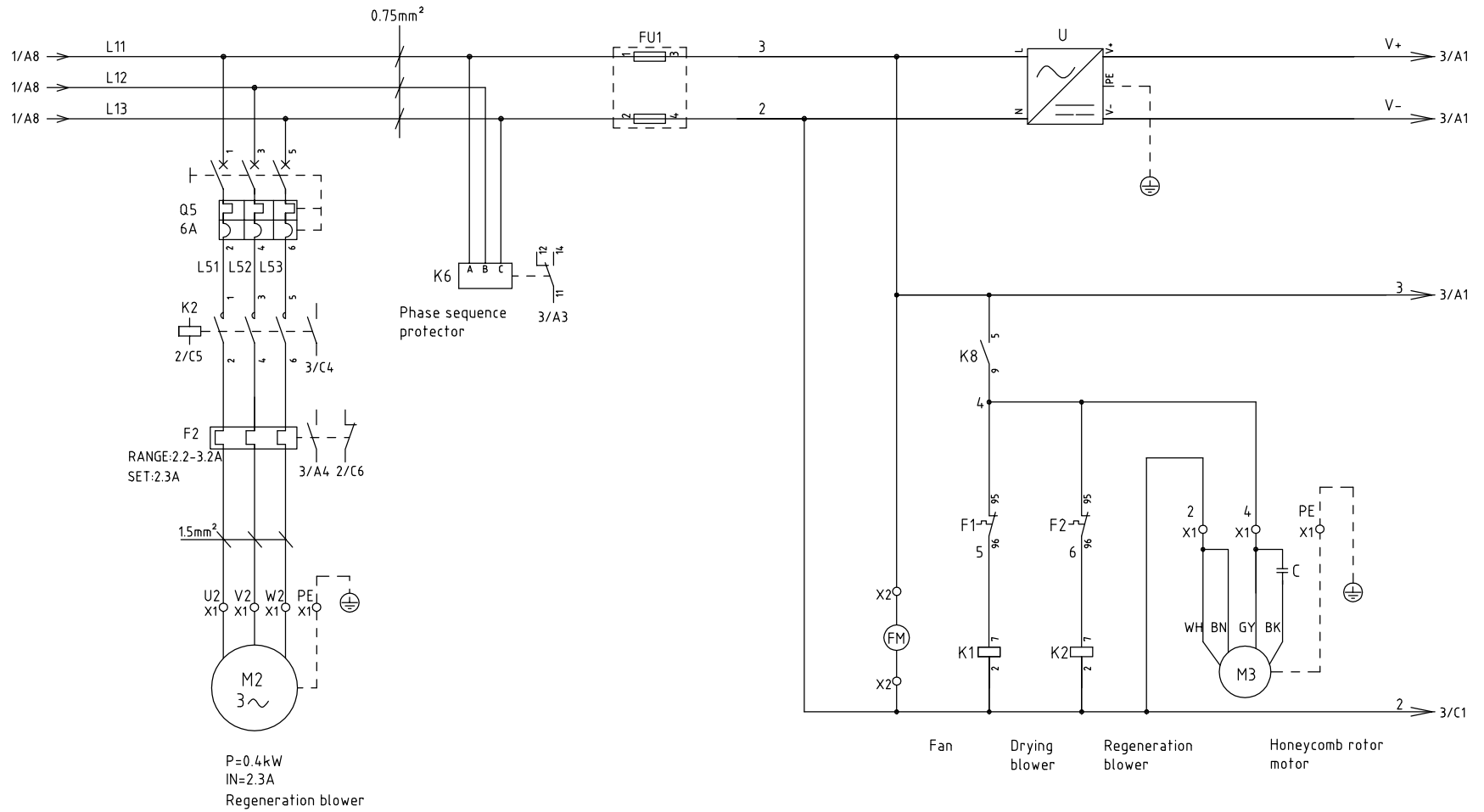

版本 Ver.C

					Drawer		Version	C
					Designer		Approved by	
					Proofread by			
Mark	Before modification	After modification	Modified by	Modify date	Checked by		Date	20160816

Title: SDD-160U(230U)/120H-LC
Main Circuit Diagram 2

Drawing NO.: SDD-160U(230U)/120H-LC-CE-230V-C-2

Scale: /
Standard: CE
Page 2
Totally 7 Pages
Voltage: 230V
Frequency: 50Hz

信易電熱機械股份有限公司
Shini Plastics Technologies, Inc.

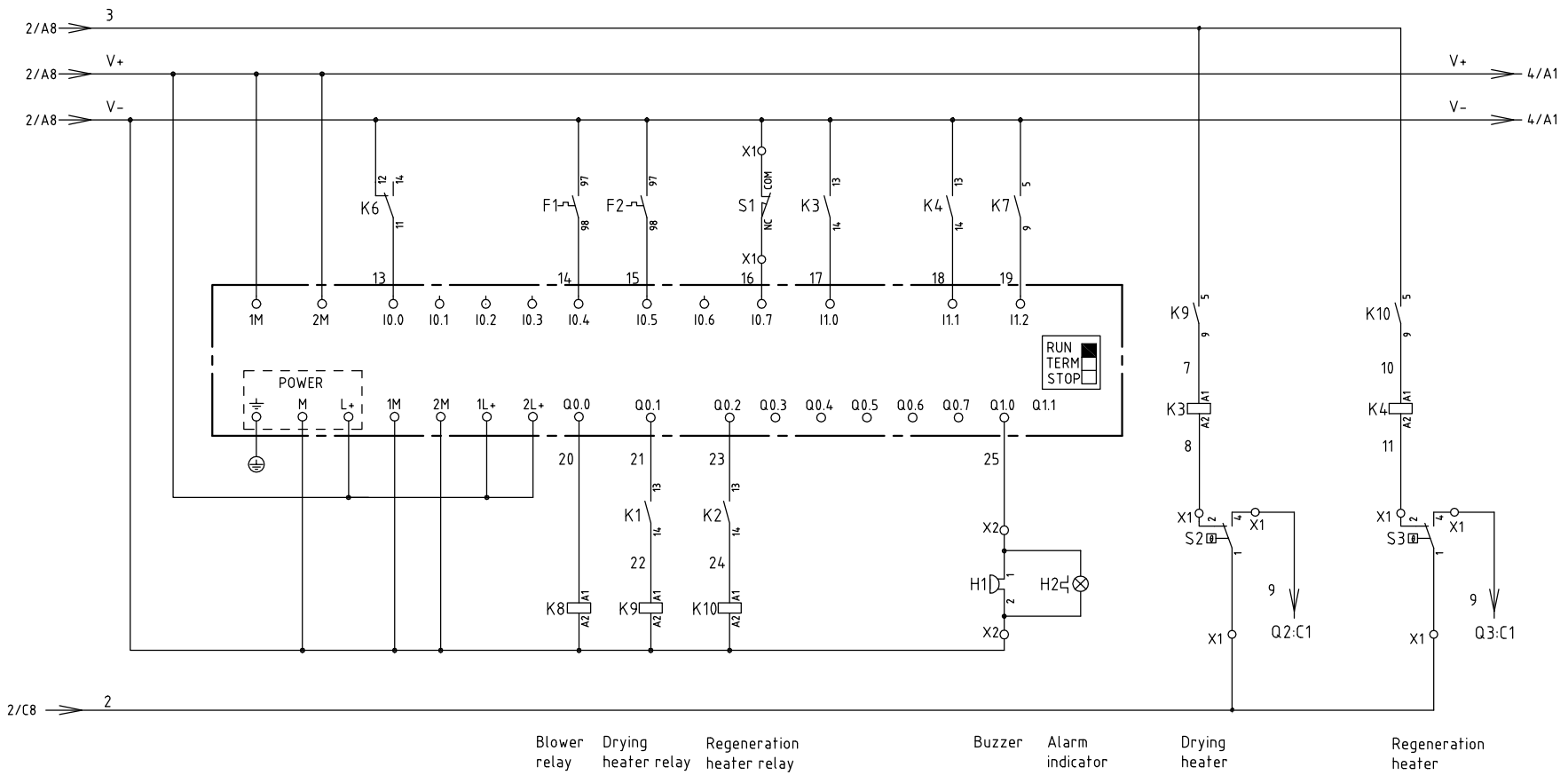

版本 Ver.C

					Drawer		Version	C	Title SDD-160U(230U)/120H-LC Control Circuit Diagram 1	Drawing NO. SDD-160U(230U)/120H-LC-CE-230V-C-3	Scale	Page 3
					Designer		Approved by				Standard CE	Totally 7 Pages
					Proofread by				SHINI 信易電熱機械股份有限公司 Shini Plastics Technologies, Inc.		Voltage	230V
Mark	Before modification	After modification	Modified by	Modify date	Checked by		Date	20160816			Frequency	50Hz

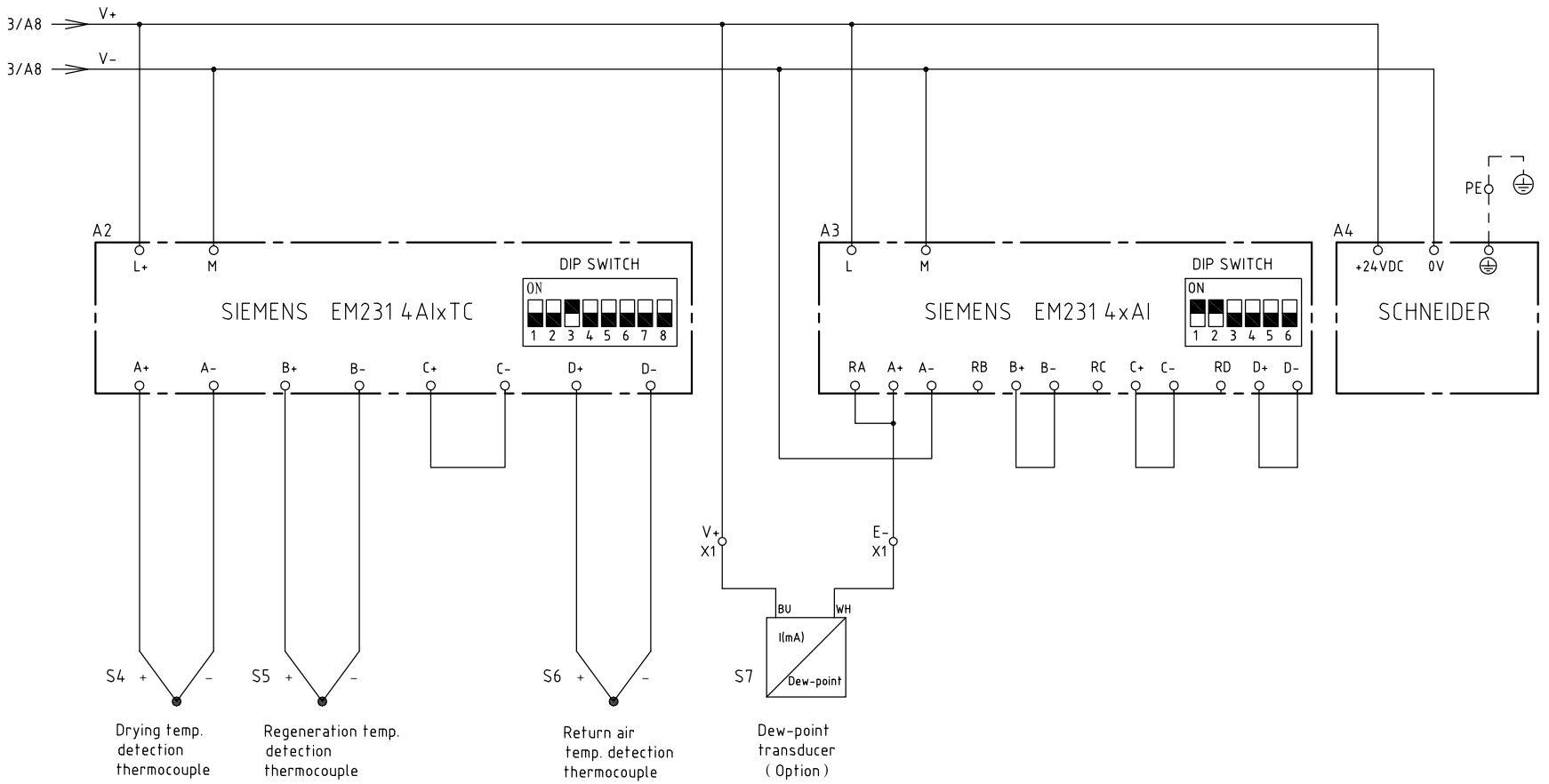

版本 Ver.C

					Drawer		Version	C	Title SDD-160U(230U)/120H-LC Control Circuit Diagram 2	Drawing NO. SDD-160U(230U)/120H-LC-CE-230V-C-4	Scale	Page 4
					Designer		Approved by				Standard CE	Totally 7 Pages
					Proofread by				信易電熱機械股份有限公司 Shini Plastics Technologies, Inc.		Voltage	230V
Mark	Before modification	After modification	Modified by	Modify date	Checked by		Date	20160816			Frequency	50Hz

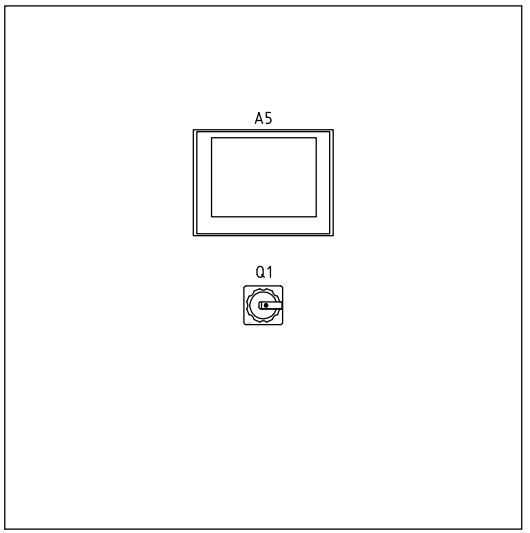

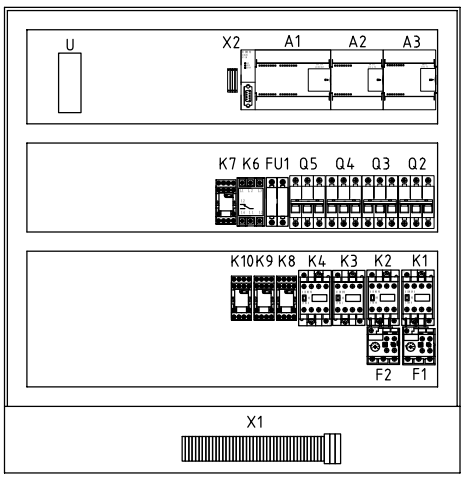

X2

PE	4	3	2	1
PE	3	2	V-	25

- 3 – Connect to cooling fan
- 25 – Connect to alarm indicator/buzzer

X1

27	26	25	24	23	22	21	20	19	18	17	16	15	14	13	PE	12	11	10	PE	9	8	7	PE	6	5	4	PE	3	2	1	PE
V+	E-	V-	16	11	9	2	2	8	9	4	2	U1	V1	W1	PE	U2	V2	W2	PE	U4	V4	W4	PE	U3	V3	W3	PE	L1	L2	L3	PE

- 26 – Connect to transducer(Option)
- 25 – Connect to dew-point
- 24 – Connect to rotor micro switch
- 22 – Connect to temperature protector
- 19 – Connect to temperature protector
- 17 – Connect to rotor motor
- 15 – Connect to honeycomb
- 13 – Connect to drying blower
- 11 – Connect to regeneration blower
- 8 – Connect to regeneration heater
- 5 – Connect to drying heater
- 2 – Connect to power lines

版本 Ver.C

					Drawer		Version	C	Title: SDD-160U(230U)/120H-LC Electrical Components Layout	Drawing NO.: SDD-160U(230U)/120H-LC-CE-230V-C-5	Scale	Page 5
					Designer		Approved by				Standard CE	Totally 7 Pages
					Proofread by				信易電熱機械股份有限公司 Shini Plastics Technologies, Inc.		Voltage	230V
Mark	Before modification	After modification	Modified by	Modify date	Checked by		Date	20160816			Frequency	50Hz

NO.	Symbol	Name	Manufacturer	Type	Specification	Number	Material number	Remark
1	Q1	Main switch	MOELLER	P1-32/EA/SVB	32A	1	YE10132320000	
2	Q2	Circuit-breaker	TECO	BM-63C 3P	25A	1	YE40302503000	
3	Q3	Circuit-breaker	TECO	BM-63C 3P	16A	1	YE40301603000	
4		Excitation release	CHINT	MX	220V 50/60Hz	2	YE40023560000	
5	Q4	Circuit-breaker	TECO	BM-63C 3P	10A	1	YE40301003000	
6	Q5	Circuit-breaker	TECO	BM-63C 3P	6A	1	YE40300603000	
7	K1	Contactor	SIEMENS	3RT6016-1AN21	220V 50/60Hz	1	YE00601621000	
8	K2	Contactor	SIEMENS	3RT6016-1AN21	220V 50/60Hz	1	YE00601621000	
9	K3	Contactor	SIEMENS	3RT6026-1AN20	220V 50/60Hz	1	YE00602622000	
10	K4	Contactor	SIEMENS	3RT6018-1AN21	220V 50/60Hz	1	YE00601800000	
11	K6	Phase relay	CHAOSHI	ABJ-10W	220V 50/60Hz	1	YE03102200000	
12	K7	Middle relay	WEIDMULLER	DRM270730LT	220V 50/60Hz	1	YE03270700000	
13	K8 K9 K10	Middle relay	WEIDMULLER	DRM270724LT	24VDC	3	YE03272400000	
14	F1	Thermo overload relay	SIEMENS	3RU6116-1FB0	3.5-5A	1	YE01160350000	
15	F2	Thermo overload relay	SIEMENS	3RU6116-1DB0	2.2-3.2A	1	YE01160220000	
16	A1	PLC	SIEMENS	CPU224 DC/DC/DC	24VDC	1	YE81022400000	
17	A2	PLC Analog module	SIEMENS	EM231 4xTC	--	1	YE82023100100	
18	A3	PLC Analog module	SIEMENS	EM231 4xAI	--	1	YE82023100000	(2)
19	A4	Human-machine interface	SCHNEIDER	GXO3501	24VDC	1	YE80350100100	
20	FU1	Fuse base	CHINT	RT18-32	2P	1	YE41032200000	
21		Fuse	CHINT	10×38 500V	2A	2	YE46002000100	
22	U	DC power	MEAN WELL	NES-35-24	OUT=DC24V 1.5A	1	YE71352400100	
23	H1	Buzzer	HITPOINT	PK-27A	24VDC	1	YE84002700000	(1)
24	H2	Alarm indicator	SHINI	LED-3051	24VDC	1	YE83305100300	(1)
25	S1	Micro switch	TEND	LXW5-11G1	250V 5(4)A	1	YE14511100000	(1)

版本 Ver.C

Notes: (1)Means it's not the material inside the control box. (2)Stands for optional.

Mark	Before modification	After modification	Modified by	Modify date

Drawer		Version	C
Designer		Approved by	
Proofread by			
Checked by		Date	20160816

Title: SDD-160U(230U)/120H-LC
Electrical Components List 1

Drawing NO.: SDD-160U(230U)/120H-LC-CE-230V-C-6

Scale: /
Standard: CE
Page 6
Totally 7 Pages
Voltage: 230V
Frequency: 50Hz

信易電熱機械股份有限公司
Shini Plastics Technologies, Inc.

NO.	Symbol	Name	Manufacturer	Type	Specification	Number	Material number	Remark
26	S2	Temperature protector	EGO	---	115-320 °C	1	BH90115000050	(1)
27	S3	Temperature protector	EGO	---	115-320 °C	1	BH90115000050	(1)
28	S4 S5 S6	Thermocouple	SHINI	ST-K	K	3	-----	(1)
29	S7	Dew-point transducer	CS	CS 217-OEM	POWER=24VDC OUT=4-20mA	1	YE90021700100	(1) (2)
30	X1	Terminal board	----	$6mm^2$	-	3	YE60000603200	
31				$6mm^2$PE	-	1	YE60000603500	
32				$4mm^2$	-	12	YE60000403200	
33				$4mm^2$PE	-	4	YE60000403500	
34				$2.5mm^2$	-	15	YE60002503200	
35				$2.5mm^2$PE	-	1	YE60002503400	
36	X2	Terminal board	----	$2.5mm^2$	-	4	YE60002503200	
37				$2.5mm^2$PE	-	1	YE60002503400	
38	FM	Fan	SUNON	DP-200A	230VAC 40W	1	YM60121200400	(1)
39	M1	Blower	SHINI	-----	230V 0.75kW	1	-----	(1)
40	M2	Blower	SHINI	-----	230V 0.4kW	1	-----	(1)
41	M3	Motor	----	-----	230V 0.015kW	1	-----	(1)
42	EH1	Pipe heater	SHINI	-----	230V 6kW	1	-----	(1)
43	EH2	Pipe heater	SHINI	-----	230V 3kW	1	----- **50Hz**	(1)
44	EH2	Pipe heater	SHINI	-----	400V 4kW	1	----- **60Hz**	(1)

版本 Ver.C

Notes: (1)Means it's not the material inside the control box. (2)Stands for optional.

Mark	Before modification	After modification	Modified by	Modify date

Drawer		Version	C
Designer		Approved by	
Proofread by			
Checked by		Date	20160816

Title: SDD-160U(230U)/120H-LC
Electrical Components List 2

Drawing NO.: SDD-160U(230U)/120H-LC-CE-230V-C-7

Scale: /
Standard: CE
Page 7
Totally 7 Pages
Voltage: 230V
Frequency: 50Hz

信易電熱機械股份有限公司
Shini Plastics Technologies, Inc.

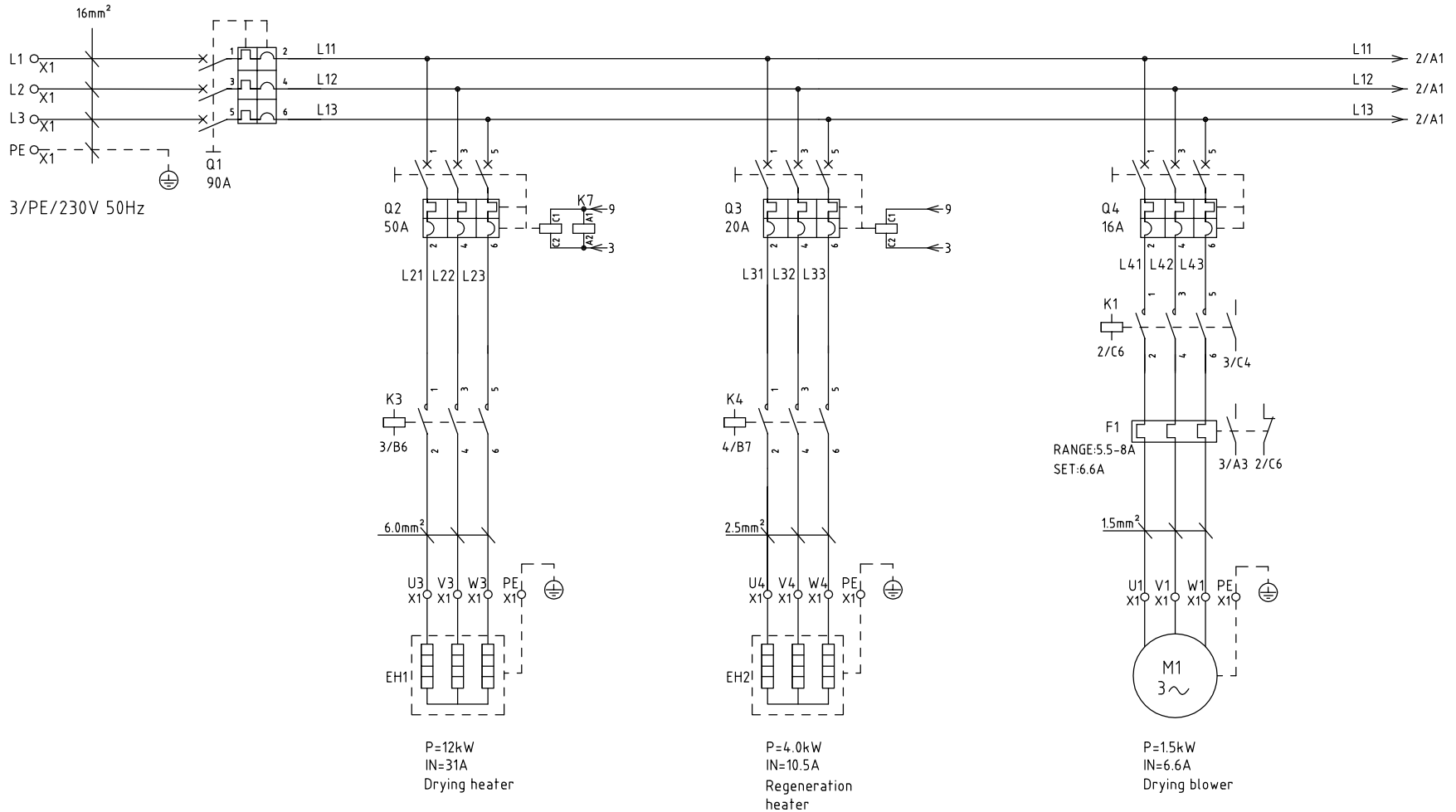

Note:For 60Hz,the regenerative heater is 6kW

版本 Ver.C

					Drawer		Version	D	Title: SDD-300U(450U)/200H-LC Main Circuit Diagram 1	Drawing NO.: SDD-300U(450U)/200H-LC-CE-230V-D-1	Scale	Page 1
					Designer		Approved by				Standard CE	Totally 7 Pages
					Proofread by				SHINI 信易電熱機械股份有限公司 Shini Plastics Technologies, Inc.		Voltage	230V
Mark	Before modification	After modification	Modified by	Modify date	Checked by		Date	20160914			Frequency	50Hz

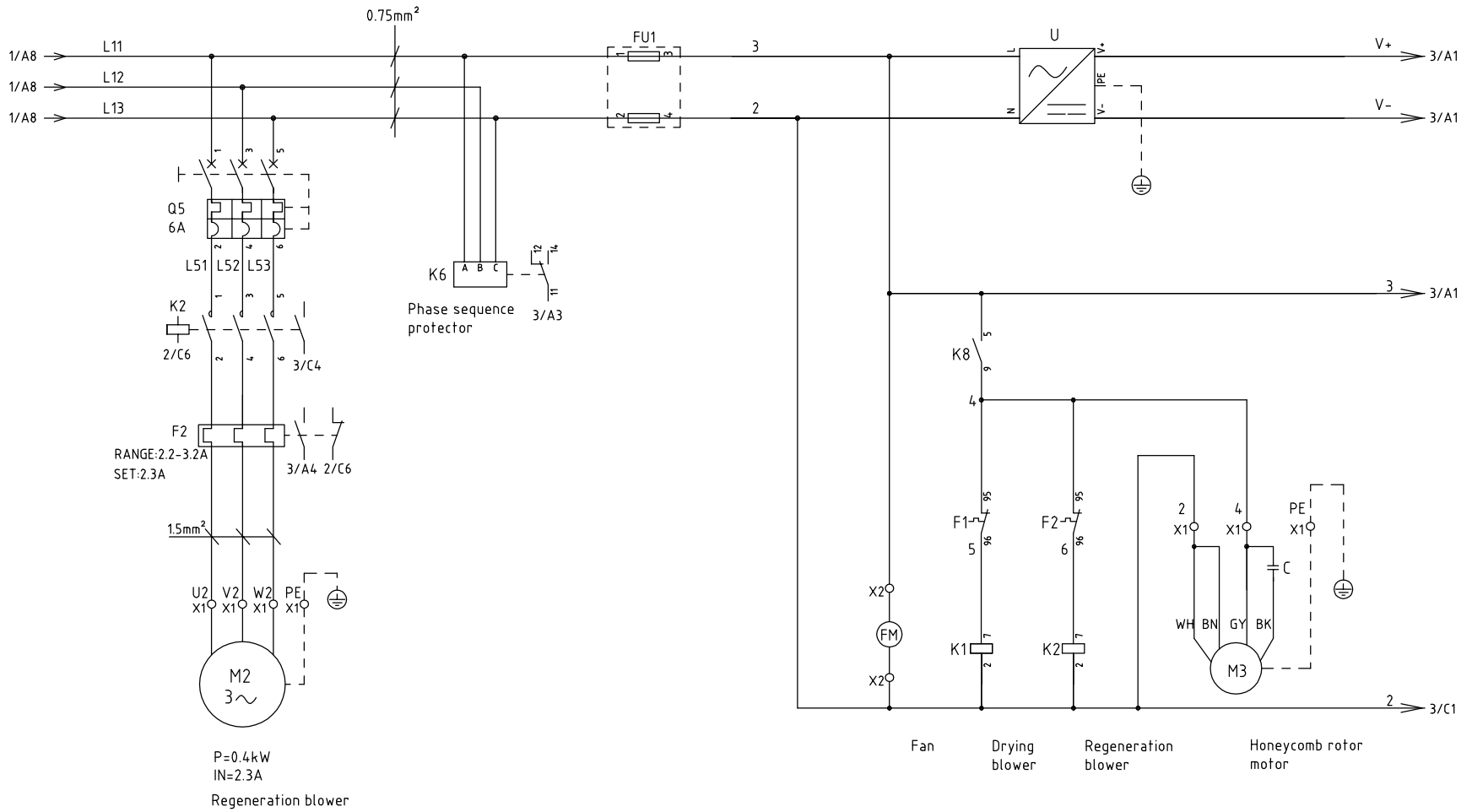

版本 Ver.C

					Drawer		Version	D
					Designer		Approved by	
					Proofread by			
Mark	Before modification	After modification	Modified by	Modify date	Checked by		Date	20160914

Title: SDD-300U(450U)/200H-LC
Main Circuit Diagram 2

Drawing NO.: SDD-300U(450U)/200H-LC-CE-230V-D-2

Scale:

Page 2

Standard: CE

Totally 7 Pages

Voltage: 230V

Frequency: 50Hz

信易電熱機械股份有限公司
Shini Plastics Technologies, Inc.

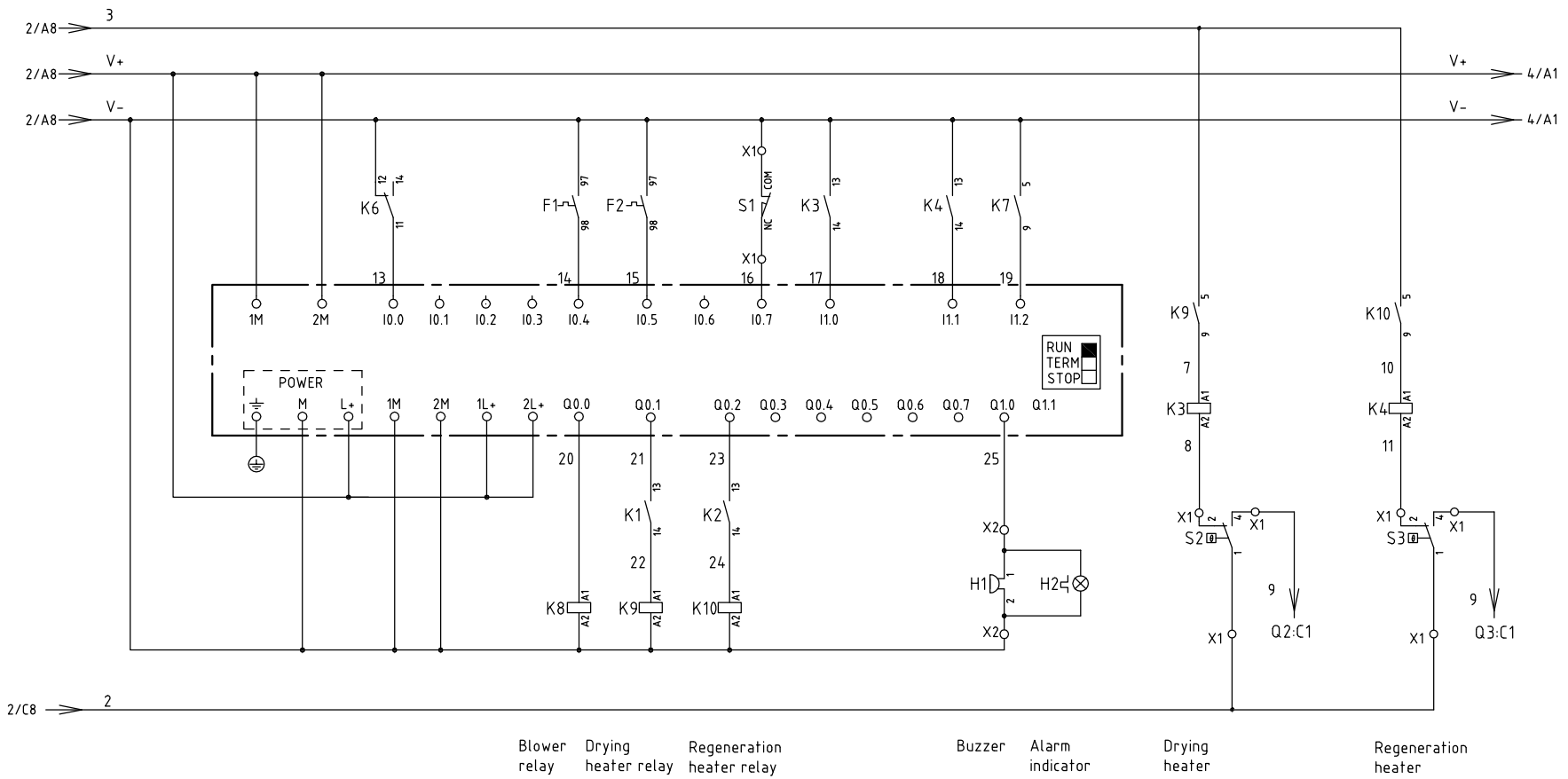

版本 Ver.C

					Drawer		Version	D	Title SDD-300U(450U)/200H-LC Control Circuit Diagram 1	Drawing NO. SDD-300U(450U)/200H-LC-CE-230V-D-3	Scale		Page 3
					Designer		Approved by				Standard	CE	Totally 7 Pages
					Proofread by				SHINI 信易電熱機械股份有限公司 Shini Plastics Technologies, Inc.		Voltage		230V
Mark	Before modification	After modification	Modified by	Modify date	Checked by		Date	20160914			Frequency		50Hz

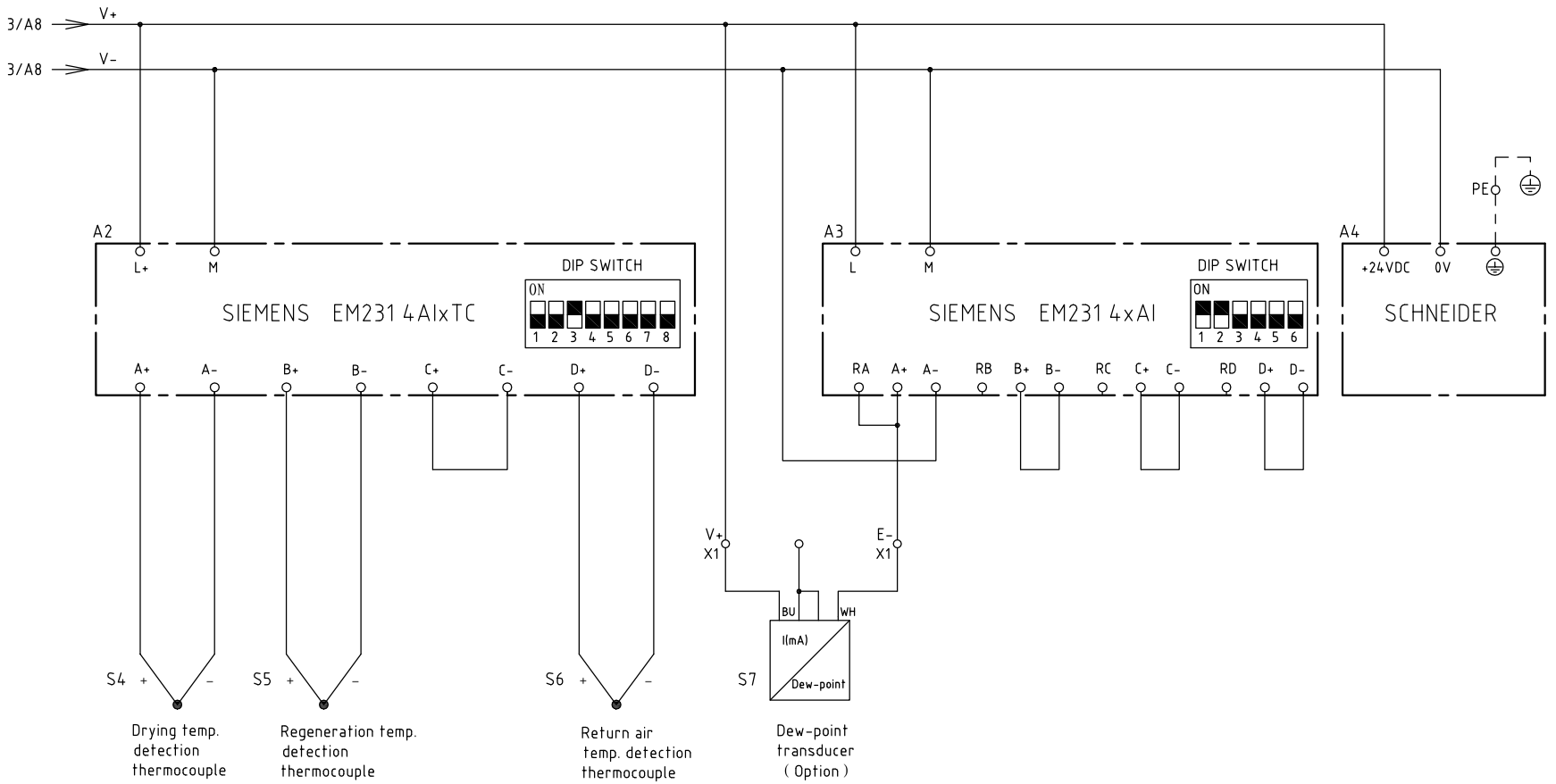

版本 Ver.C

					Drawer		Version	D	Title SDD-300U(450U)/200H-LC Control Circuit Diagram 2	Drawing NO. SDD-300U(450U)/200H-LC-CE-230V-D-4	Scale	Page 4
					Designer		Approved by				Standard CE	Totally 7 Pages
					Proofread by				SHINI 信易電熱機械股份有限公司 Shini Plastics Technologies, Inc.		Voltage	230V
Mark	Before modification	After modification	Modified by	Modify date	Checked by		Date	20160914			Frequency	50Hz

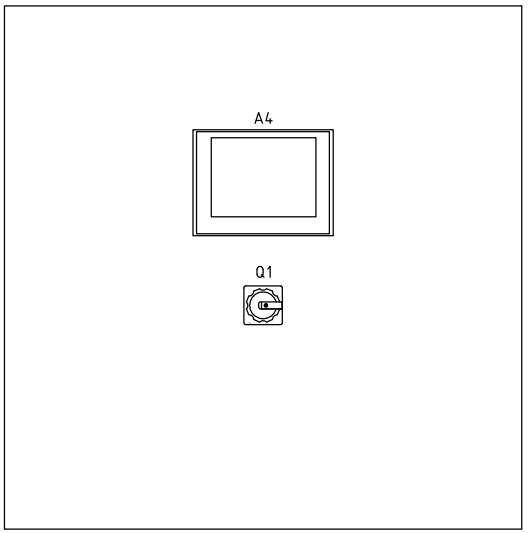

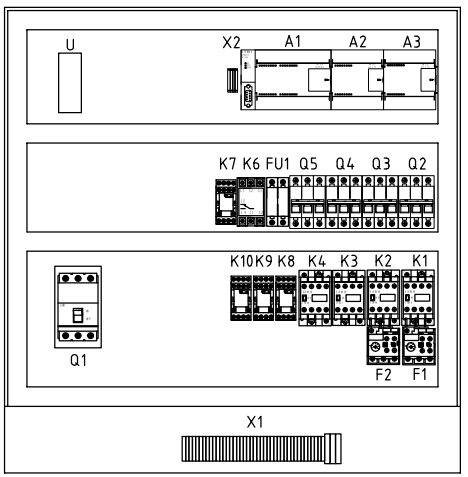

X2

PE	4	3	2	1
PE	3	2	V-	25

- 4 / 3: Connect to cooling fan
- 1 / 25: Connect to alarm indicator/buzzer

X1

25	24	23	22	21	20	19	18	17	16	15	14	13	PE	12	11	10	PE	9	8	7	PE	6	5	4	PE	3	2	1	PE
V+	E-	11	9	2	2	8	9	4	2	U1	V1	W1	PE	U2	V2	W2	PE	U4	V4	W4	PE	U3	V3	W3	PE	L1	L2	L3	PE

- 25 / 24: Connect to transducer(Option)
- 11 / 9: Connect to dew-point
- 2 / 2: Connect to temperature protector
- 8 / 9: Connect to temperature protector
- 4 / 2: Connect to honeycomb rotor motor
- U1 / V1 / W1 / PE: Connect to drying blower
- U2 / V2 / W2 / PE: Connect to regeneration blower
- U4 / V4 / W4 / PE: Connect to regeneration heater
- U3 / V3 / W3 / PE: Connect to drying heater
- L1 / L2 / L3 / PE: Connect to power lines

版本 Ver.C

Power cable can directly connected to the breaker interlock which not pass by the terminal board.

Mark	Before modification	After modification	Modified by	Modify date

Drawer		Version	D
Designer		Approved by	
Proofread by			
Checked by		Date	20160914

Title: SDD-300U(450U)/200H-LC Electrical Components Layout

Drawing NO.: SDD-300U(450U)/200H-LC-CE-230V-D-5

信易電熱機械股份有限公司
Shini Plastics Technologies, Inc.

Scale		Page	5
Standard	CE	Totally	7 Pages
Voltage		230V	
Frequency		50Hz	

NO.	Symbol	Name	Manufacturer	Type	Specification	Number	Material number	Remark
1	Q1	Main switch	ABB	A1A125TMF90	90A	1	YE41109200000	
2	Q2	Circuit-breaker	TECO	BM-63C 3P	50A	1	YE40305003000	
3	Q3	Circuit-breaker	TECO	BM-63C 3P	20A	1	YE40302003000	
4		Excitation release	CHINT	MX	220V 50/60Hz	2	YE40023560000	
5	Q4	Circuit-breaker	TECO	BM-63C 3P	16A	1	YE40301603000	
6	Q5	Circuit-breaker	TECO	BM-63C 3P	6A	1	YE40300603000	
7	K1	Contactor	SIEMENS	3RT6016-1AN21	220V 50/60Hz	1	YE00601621000	
8	K2	Contactor	SIEMENS	3RT6016-1AN21	220V 50/60Hz	1	YE00601621000	
9	K3	Contactor	SIEMENS	3RT6028-1AN20	220V 50/60Hz	1	YE00602822000	
10	K4	Contactor	SIEMENS	3RT6018-1AN21	220V 50/60Hz	1	YE00601821000	
11	K6	Phase relay	CHAOSHI	ABJ-10W	220V 50/60Hz	1	YE03102200000	
12	K7	Middle relay	WEIDMULLER	DRM270730LT	220V 50/60Hz	1	YE03270700000	
13	K8 K9 K10	Middle relay	WEIDMULLER	DRM270724LT	24VDC	3	YE03272400000	
14	F1	Thermo overload relay	SIEMENS	3RU6116-1HB0	5.5-8A	1	YE01160550000	
15	F2	Thermo overload relay	SIEMENS	3RU6116-1DB0	2.2-3.2A	1	YE01160220000	
16	A1	PLC	SIEMENS	CPU224 DC/DC/DC	24VDC	1	YE81022400000	
17	A2	PLC Analog module	SIEMENS	EM231 4xTC	--	1	YE82023100100	
18	A3	PLC Analog module	SIEMENS	EM231 4xAI	--	1	YE82023100000	(2)
19	A4	Human-machine interface	SCHNEIDER	GXO3501	24VDC	1	YE80350100100	
20	FU1	Fuse base	CHINT	RT18-32	2P	1	YE41032200000	
21		Fuse	CHINT	10×38 500V	2A	2	YE46002000100	
22	U	DC power	MEAN WELL	NES-35-24	OUT=DC24V 1.5A	1	YE71352400100	
23	H1	Buzzer	HITPOINT	PK-27A	24VDC	1	YE84002700000	(1)
24	H2	Alarm indicator	SHINI	LED-3051	24VDC	1	YE83305100300	(1)
25	S1	Micro switch	TEND	LXW5-11G1	250V 5(4)A	1	YE14511100000	(1)

版本 Ver.C

Notes: (1)Means it's not the material inside the control box. (2)Stands for optional.

Mark	Before modification	After modification	Modified by	Modify date

Drawer		Version	D
Designer		Approved by	
Proofread by			
Checked by		Date	20160914

Title: SDD-300U(450U)/200H-LC
Electrical Components List 1

Drawing NO.: SDD-300U(450U)/200H-LC-CE-230V-D-6

Scale: /
Standard: CE
Page 6
Totally 7 Pages
Voltage: 230V
Frequency: 50Hz

信易電熱機械股份有限公司
Shini Plastics Technologies, Inc.

NO.	Symbol	Name	Manufacturer	Type	Specification	Number	Material number	Remark
26	S2	Temperature protector	EGO	---	115-320 °C	1	BH90115000050	(1)
27	S3	Temperature protector	EGO	---	115-320 °C	1	BH90115000050	(1)
28	S4 S5 S6	Thermocouple	SHINI	ST-K	K	3	-----	(1)
29	S7	Dew-point transducer	CS	CS 217	POWER=24VDC OUT=4-20mA	1	YE90021700100	(1) (2)
30	X1	Terminal board	----	16mm^{2}PE	-	1	YE60001603500	
31				6mm^2	-	3	YE60000603200	
32				6mm^{2}PE	-	1	YE60000603500	
33				4mm^2	-	9	YE60000403200	
34				4mm^{2}PE	-	3	YE60000403500	
35				2.5mm^2	-	15	YE60002503200	
36				2.5mm^{2}PE	-	1	YE60002503400	
37	X2	Terminal board	----	2.5mm^2	-	4	YE60002503200	
38				2.5mm^{2}PE	-	1	YE60002503400	
39	FM	Fan	SUNON	DP-200A	230VAC 40W	1	YM60121200400	(1)
40	M1	Blower	SHINI	-----	230V 1.5kW	1	-----	(1)
41	M2	Blower	SHINI	-----	230V 0.4kW	1	-----	(1)
42	M3	Motor	----	-----	230V 0.006kW	1	-----	(1)
43	EH1	Pipe heater	SHINI	-----	230V 12kW	1	-----	(1)
44	EH2	Pipe heater	SHINI	-----	230V 4kW	1	-----	(1)

版本 Ver.C

Notes: (1)Means it's not the material inside the control box. (2)Stands for optional.

Mark	Before modification	After modification	Modified by	Modify date

Drawer		Version	D
Designer		Approved by	
Proofread by			
Checked by		Date	20160914

Title: SDD-300U(450U)/200H-LC
Electrical Components List 2

Drawing NO.: SDD-300U(450U)/200H-LC-CE-230V-D-7

Scale: /
Standard: CE
Page 7
Totally 7 Pages
Voltage: 230V
Frequency: 50Hz

信易電熱機械股份有限公司
Shini Plastics Technologies, Inc.

ⓐ Main power wire dia.

ⓑ The rated current of main power switch

Ⓒ1 The rated current of drying blower breaker

Ⓒ2 The rated current of regeneration blower breaker

Ⓒ3 The rated current of drying heater circuit breaker

Ⓒ4 The rated current of regeneration heater circuit breaker

ⓓ Drying blower wire dia.

ⓔ Drying blower overload relay

ⓕ Default drying blower overload relay

ⓖ Drying blower power

ⓗ Drying blower current

ⓘ Regeneration blower wire dia

ⓙ Regeneration blower overload relay

ⓚ Defaultregeneration blower overload relay

ⓛ Regeneration blower power

ⓜ Regeneration blower current

ⓝ Drying heater wire dia.

ⓞ Drying heater power

ⓟ Drying heater current

ⓠ Regeneration heater wire dia.

ⓡ Regeneration heater power

ⓢ Regeneration heater current

Mode \ Symbol	Ver.	ⓐ	ⓑ	Ⓒ1	Ⓒ2	Ⓒ3	Ⓒ4	ⓓ	ⓔ	ⓕ	ⓖ	ⓗ	ⓘ	ⓙ	ⓚ	ⓛ	ⓜ	ⓝ	ⓞ	ⓟ	ⓠ	ⓡ	ⓢ
SDD-600U/400H	Ver.B	25.0	125	32	10	80	32	4.0	11-16	15	3.75	14.5	1.5	3.5-5	4.0	0.75	3.8	16.0	18.0	47	4.0	7.2	19
SDD-750U/400H	Ver.B	25.0	125	32	10	80	32	4.0	11-16	15	3.75	14.5	1.5	3.5-5	4.0	0.75	3.8	16.0	18.0	47	4.0	7.2	19
SDD-900U/700H	Ver.C	50.0	160	63	16	100	40	6.0	23-28	26	7.5	25.2	1.5	5.5-8	6.8	1.5	6.6	6.0	12×2	31×2	6.0	10.0	26.5
SDD-1200U/700H	Ver.E	50.0	160	63	16	100	40	6.0	23-28	26	7.5	25.2	1.5	5.5-8	6.8	1.5	6.6	6.0	12×2	31×2	6.0	10.0	26.5

Mark	Before modification	After modification	Modified by	Modify date	Drawer		Version	C
					Designer		Approved by	
					Proofread by			
					Checked by		Date	20151022

Title: SDD-PLC
Parameter List of Circuit Diagram

Drawing NO.: SDD-PLC-CE-230V-C-1

信易電熱機械股份有限公司
Shini Plastics Technologies, Inc.

Scale		Page	1
Standard	CE	Totally	20 Pages
Voltage	230V		
Frequency	50Hz		

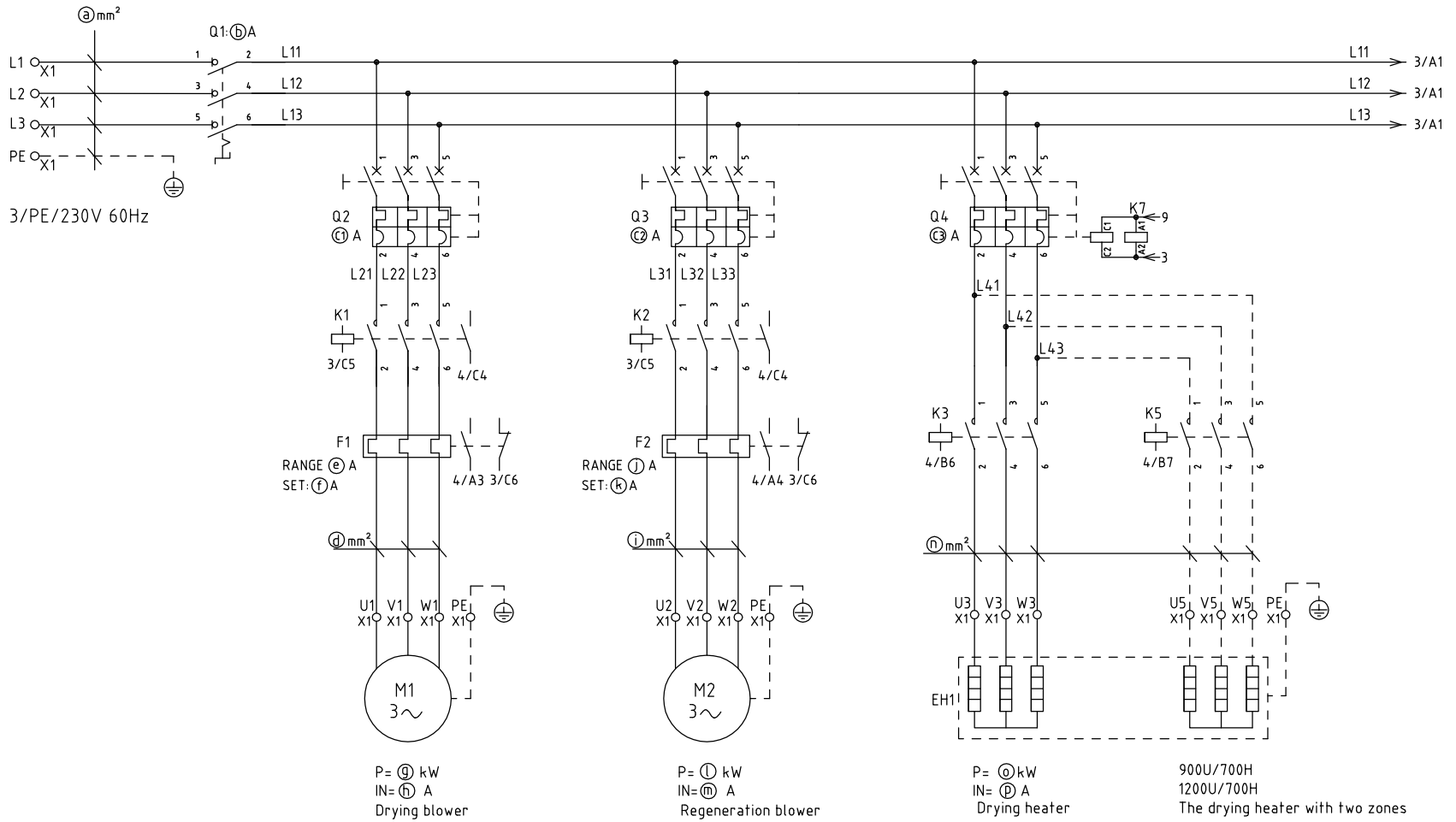

					Drawer		Version	A	Title: SDD-PLC Main Circuit Diagram 1	Drawing NO. SDD-PLC-CE-230V-A-2	Scale	Page 2
					Designer		Approved by				Standard CE	Totally 20 Pages
					Proofread by				信易電熱機械股份有限公司 Shini Plastics Technologies, Inc.		Voltage	230V
Mark	Before modification	After modification	Modified by	Modify date	Checked by		Date	20130825			Frequency	60Hz

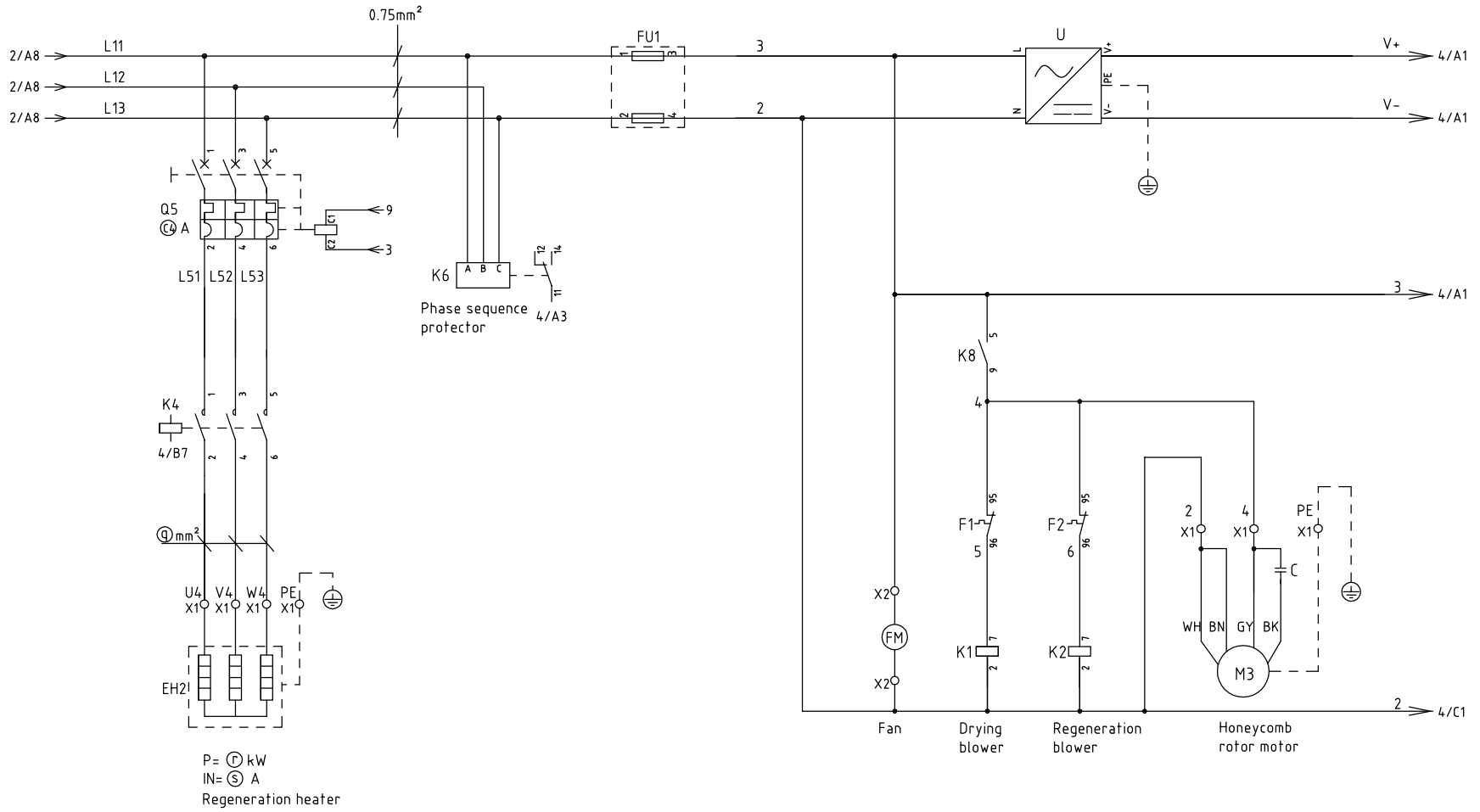

					Drawer		Version	A	Title: SDD-PLC Main Circuit Diagram 2	Drawing NO. SDD-PLC-CE-230V-A-3	Scale		Page 3
					Designer		Approved by				Standard	CE	Totally 20 Pages
					Proofread by				信易電熱機械股份有限公司 Shini Plastics Technologies, Inc.		Voltage	230V	
Mark	Before modification	After modification	Modified by	Modify date	Checked by		Date	20130825			Frequency	60Hz	

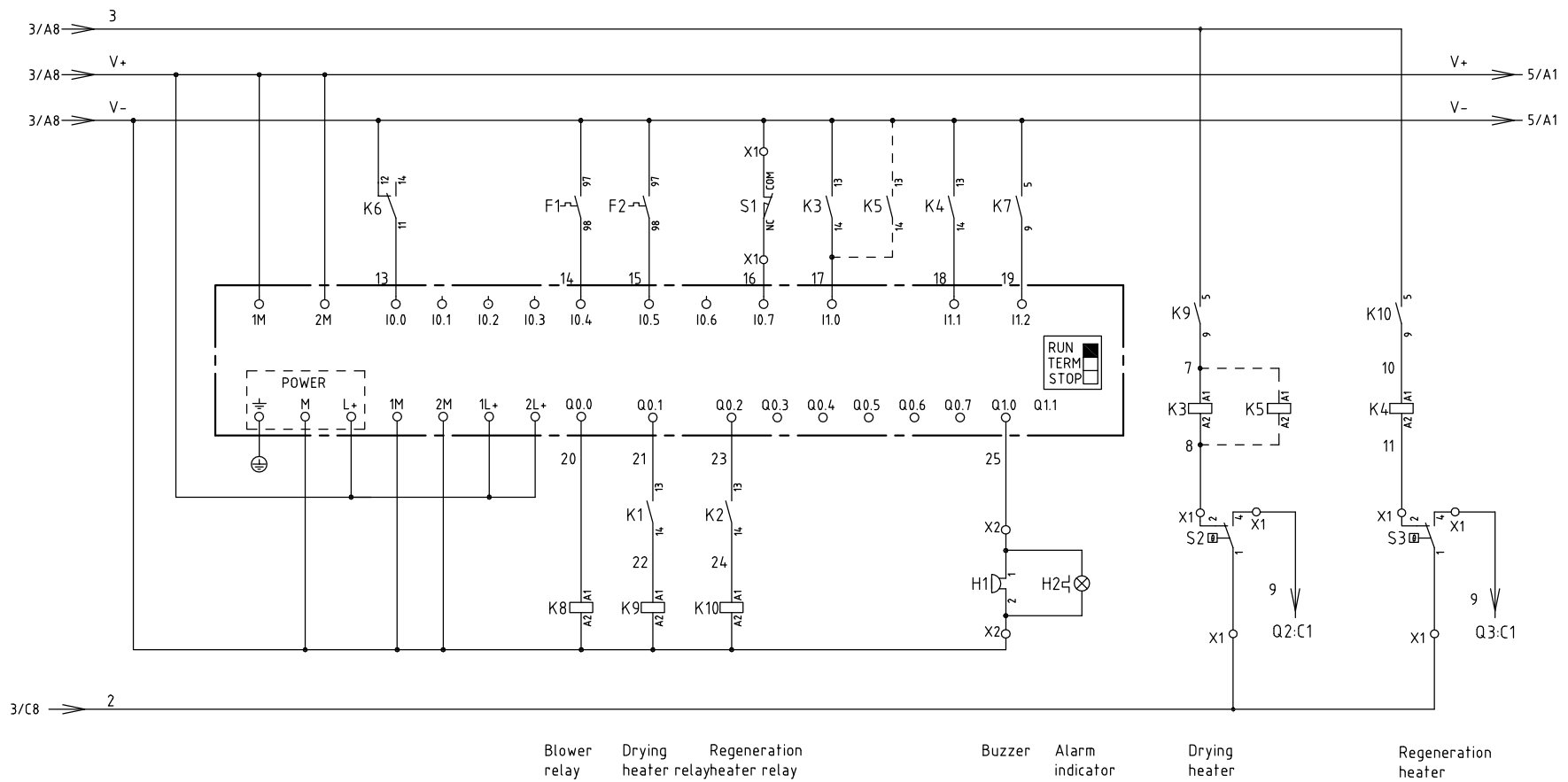

					Drawer		Version	A	Title: SDD-PLC Control Circuit Diagram 1	Drawing NO. SDD-PLC-CE-230V-A-4	Scale	Page 4
					Designer		Approved by				Standard CE	Totally 20 Pages
					Proofread by				信易電熱機械股份有限公司 Shini Plastics Technologies, Inc.		Voltage	230V
Mark	Before modification	After modification	Modified by	Modify date	Checked by		Date	20130825			Frequency	60Hz

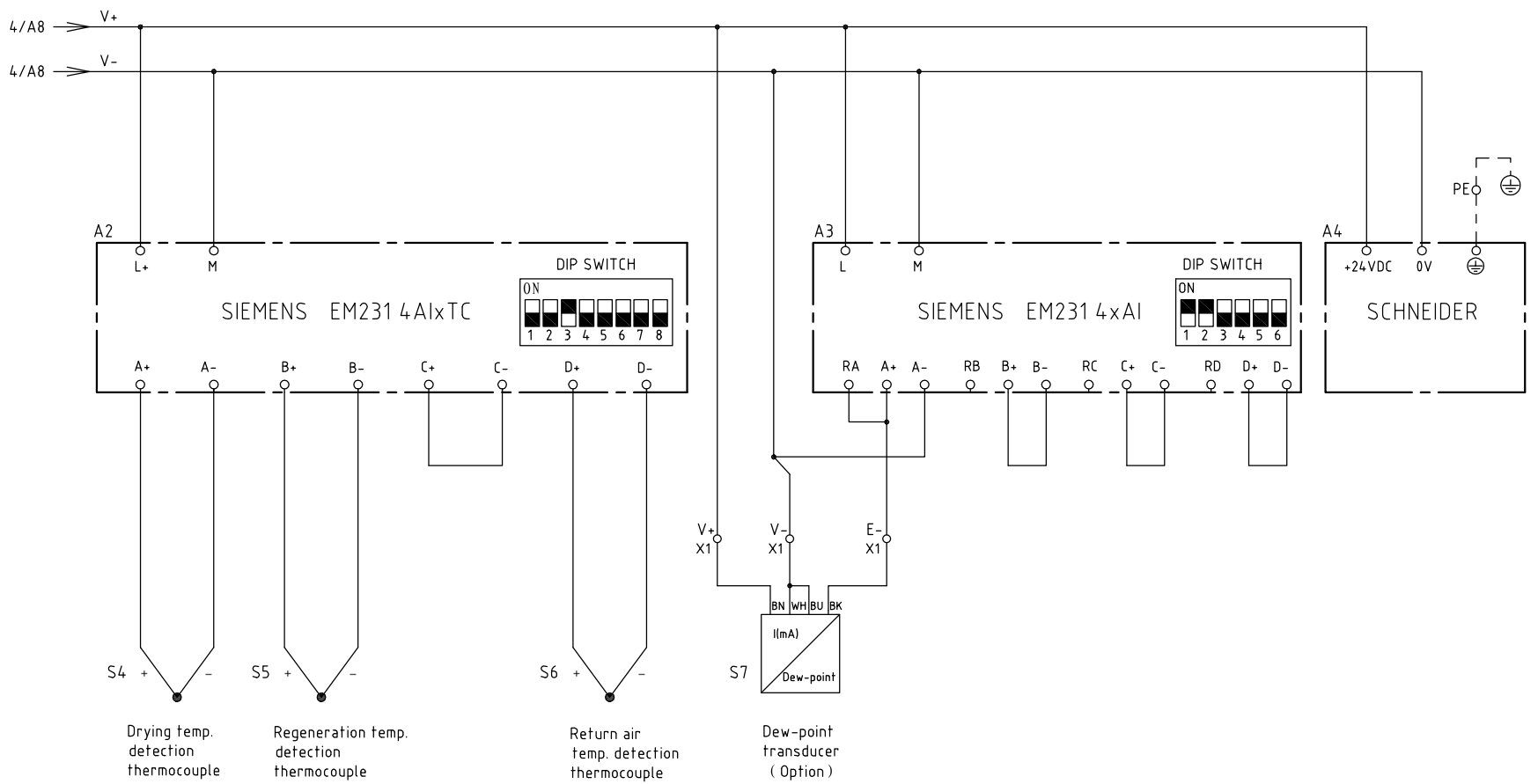

Mark	Before modification	After modification	Modified by	Modify date	Drawer		Version	A
					Designer		Approved by	
					Proofread by			
					Checked by		Date	20130825

Title: SDD-PLC
Control Circuit Diagram 2

Drawing NO.: SDD-PLC-CE-230V-A-5

信易電熱機械股份有限公司
Shini Plastics Technologies, Inc.

Scale		Page	5
Standard	CE	Totally	20 Pages
Voltage	230V		
Frequency	60Hz		

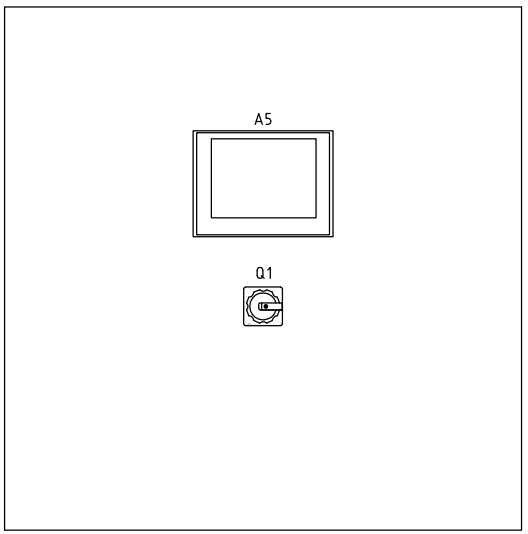

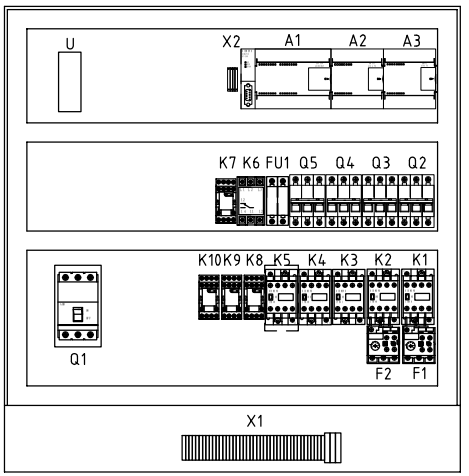

X2

PE	4	3	2	1
PE	3	2	2	25
	Connect to fan motor			Connect to alarm indicator/buzzer

X1

29	28	27	26	25	24	23	22	21	20	19	18	17	16	PE	15	14	13	PE	12	11	10	PE	9	8	7	6	5	4	PE	3	2	1	PE
V+	V-	E-	11	9	2	2	8	9	3	2	U1	V1	W1	PE	U2	V2	W2	PE	U4	V4	W4	PE	U5	V5	W5	U3	V3	W3	PE	L1	L2	L3	PE
	Connect to dew-point transducer(Option)			Connect to temperature protector			Connect to temperature protector			Connect to honeycomb rotor motor		Connect to drying blower				Connect to regeneration blower				Connect to regeneration heater				Connect to drying heater 2				Connect to drying heater 1			Connect to power lines		

Note:Models above SDD-230U/120H,the power lines not pass by the Terminal board.

Models above 900U/700H with two zones

Mark	Before modification	After modification	Modified by	Modify date

Drawer		Version	B
Designer		Approved by	
Proofread by			
Checked by		Date	20131023

Title: SDD-PLC Electrical Components Layout

Drawing NO.: SDD-PLC-CE-230V-B-6

SHINI 信易電熱機械股份有限公司 Shini Plastics Technologies, Inc.

Scale		Page	6
Standard	CE	Totally	20 Pages
Voltage		230V	
Frequency		60Hz	

NO.	Symbol	Name	Manufacturer	Type	Specification	Number	Material number	Remark
1	Q1	Main switch	ABB	A1A125TMF125	125A	1	YE41161400000	
2	Q2	Circuit-breaker	CHINT	DZ47-63 3P	32A	1	YE40603200000	
3	Q3	Circuit-breaker	CHINT	DZ47-60 3P	10A	1	YE40600300000	
4	Q4	Circuit-breaker	CHINT	DZ47-60 3P	80A	1	YE40800300000	
5	Q5	Circuit-breaker	CHINT	DZ47-60 3P	32A	1	YE40603200000	
6		Excitation release	CHINT	MX	220V 50/60Hz	2	YE40023560000	
7	K1	Contactor	SIEMENS	3RT6025-1AN20	220V 50/60Hz	1	YE00602522000	
8	K2	Contactor	SIEMENS	3RT6015-1AN21	220V 50/60Hz	1	YE00601521000	
9	K3	Contactor	SIEMENS	3RT5044-1AN20	220V 50/60Hz	1	YE00504400000	
10	K4	Contactor	SIEMENS	3RT6027-1AN20	220V 50/60Hz	1	YE00602722000	
11	K6	Phase relay	CHAOSHI	ABJ-10W	220V 50/60Hz	1	YE03102200000	
12	K7	Middle relay	WEIDMULLER	DRM270730LT	220V 50/60Hz	1	YE03270700000	
13	K8 K9 K10	Middle relay	WEIDMULLER	DRM270724LT	24VDC	3	YE03272400000	
14	F1	Thermo overload relay	SIEMENS	3RU6116-4AB0	11-16A	1	YE01260110000	
15	F2	Thermo overload relay	SIEMENS	3RU6116-1FB0	3.5-5A	1	YE01160350000	
16	A1	PLC	SIEMENS	CPU224 DC/DC/DC	24VDC	1	YE81022400000	
17	A2	PLC Analog module	SIEMENS	EM231 4xTC	--	1	YE82023100100	
18	A3	PLC Analog module	SIEMENS	EM231 4xAI	--	1	YE82023100000	(2)
19	A4	Human-machine interface	SCHNEIDER	GXO3501	24VDC	1	YE80350100100	
20	FU1	Fuse base	CHINT	RT18-32	2P	1	YE41032200000	
21		Fuse	CHINT	10×38 500V	2A	2	YE46002000100	
22	U	DC power	MEAN WELL	NES-35-24	OUT=DC24V 1.5A	1	YE71352400100	
23	H1	Buzzer	HITPOINT	PK-27A	24VDC	1	YE84002700000	(1)
24	H2	Alarm indicator	SHINI	LED-3051	24VDC	1	YE83305100300	(1)
25								

Notes: (1)Means it's not the material inside the control box. (2)Stands for optional.

Mark	Before modification	After modification	Modified by	Modify date

Drawer		Version	A
Designer		Approved by	
Proofread by			
Checked by		Date	20130825

Title: SDD-600U(750U)/400H
Electrical Components List 1

Drawing NO.: SDD-PLC-CE-230V-A-17

信易電熱機械股份有限公司
Shini Plastics Technologies, Inc.

Scale		Page	17
Standard	CE	Totally	20 Pages
Voltage	230V		
Frequency	60Hz		

NO.	Symbol	Name	Manufacturer	Type	Specification	Number	Material number	Remark
26	S1	Micro switch	TEND	LXW5-11G1	250V 5(4)A	1	YE14511100000	(1)
27	S2	Temperature protector	EGO	---	115-320 °C	1	BH90115000050	(1)
28	S3	Temperature protector	EGO	---	115-320 °C	1	BH90115000050	(1)
29	S4 S5 S6	Thermocouple	SHINI	ST-K	K	3	-----	(1)
30	S7	Dew-point transducer	VASALA	DMT143G	POWER=24VDC OUT=4-20mA	1	YE15041200000	(1) (2)
31	X1	Terminal board	----	16mm^{2}PE	-	1	YE61163500000	
32				16mm^2	-	3	YE61060000000	
33				16mm^{2}PE	-	1	YE61063500000	
34				4mm^2	-	9	YE61040000000	
35				4mm^{2}PE	-	3	YE61043500000	
36				2.5mm^2	-	15	YE61250040000	
37				2.5mm^{2}PE	-	1	YE61253500000	
38	X2	Terminal board	----	2.5mm^2	-	4	YE61250040000	
39				2.5mm^{2}PE	-	1	YE61253500000	
40	FM	Fan	SUNON	DP-200A	230VAC 40W	1	YM60121200400	(1)
41	M1	Blower	SHINI	-----	230V 3.75kW	1	-----	(1)
42	M2	Blower	SHINI	-----	230V 0.75kW	1	-----	(1)
43	M3	Motor	----	-----	230V 0.015kW	1	-----	(1)
44	EH1	Pipe heater	SHINI	-----	230V 18kW	1	-----	(1)
45	EH2	Pipe heater	SHINI	-----	230V 7.2kW	1	-----	(1)

Notes: (1)Means it's not the material inside the control box. (2)Stands for optional.

Mark	Before modification	After modification	Modified by	Modify date

Drawer		Version	A
Designer		Approved by	
Proofread by			
Checked by		Date	20130825

Title: SDD-600U(750U)/400H
Electrical Components List 2

Drawing NO.: SDD-PLC-CE-230V-A-18

信易電熱機械股份有限公司
Shini Plastics Technologies, Inc.

Scale		Page	18
Standard	CE	Totally	20 Pages
Voltage	230V		
Frequency	60Hz		

NO.	Symbol	Name	Manufacturer	Type	Specification	Number	Material number	Remark
1	Q1	Main switch	ABB	A2B250TMF160	160A	1	YE41161500000	
2	Q2	Circuit-breaker	TECO	BM-63C 3P	63A	1	YE40306303000	
3	Q3	Circuit-breaker	TECO	BM-63C 3P	16A	1	YE40301603000	
4	Q4	Circuit-breaker	TECO	BM-100D 3P	100A	1	YE40310003000	
5	Q5	Circuit-breaker	TECO	BM-63C 3P	40A	1	YE40304003000	
6		Excitation release	CHINT	MX	220V 50/60Hz	2	YE40023560000	
7	K1	Contactor	SIEMENS	3RT6027-1AN20	220V 50/60Hz	1	YE00602722000	
8	K2	Contactor	SIEMENS	3RT6016-1AN21	220V 50/60Hz	1	YE00601621000	
9	K3 K5	Contactor	SIEMENS	3RT6028-1AN20	220V 50/60Hz	2	YE00602822000	
10	K4	Contactor	SIEMENS	3RT6028-1AN20	220V 50/60Hz	1	YE00602822000	
11	K6	Phase relay	CHAOSHI	ABJ-10W	220V 50/60Hz	1	YE03102200000	
12	K7	Middle relay	WEIDMULLER	DRM270730LT	220V 50/60Hz	1	YE03270700000	
13	K8 K9 K10	Middle relay	WEIDMULLER	DRM270724LT	24VDC	3	YE03272400000	
14	F1	Thermo overload relay	SIEMENS	3RU6116-4NB0	23-28A	1	YE01612620000	
15	F2	Thermo overload relay	SIEMENS	3RU6116-1HB0	5.5-8A	1	YE01160550000	
16	A1	PLC	SIEMENS	CPU224 DC/DC/DC	24VDC	1	YE81022400000	
17	A2	PLC Analog module	SIEMENS	EM231 4xTC	--	1	YE82023100100	
18	A3	PLC Analog module	SIEMENS	EM231 4xAI	--	1	YE82023100000	(2)
19	A4	Human-machine interface	SCHNEIDER	GXO3501	24VDC	1	YE80350100100	
20	FU1	Fuse base	CHINT	RT18-32	2P	1	YE41032200000	
21		Fuse	CHINT	10×38 500V	2A	2	YE46002000100	
22	U	DC power	MEAN WELL	NES-35-24	OUT=DC24V 1.5A	1	YE71352400100	
23	H1	Buzzer	HITPOINT	PK-27A	24VDC	1	YE84002700000	(1)
24	H2	Alarm indicator	SHINI	LED-3051	24VDC	1	YE83305100300	(1)
25								

Notes: (1)Means it's not the material inside the control box. (2)Stands for optional.

Mark	Before modification	After modification	Modified by	Modify date

Drawer		Version	B
Designer		Approved by	
Proofread by			
Checked by		Date	20151022

Title: SDD-900U(1200U)/700H
Electrical Components List 1

Drawing NO.: SDD-PLC-CE-230V-B-19

信易電熱機械股份有限公司
Shini Plastics Technologies, Inc.

Scale		Page	19
Standard	CE	Totally	20 Pages
Voltage	230V		
Frequency	50Hz		

NO.	Symbol	Name	Manufacturer	Type	Specification	Number	Material number	Remark
26	S1	Micro switch	TEND	LXW5-11G1	250V 5(4)A	1	YE14511100000	(1)
27	S2	Temperature protector	EGO	---	115-320 °C	1	BH90115000050	(1)
28	S3	Temperature protector	EGO	---	115-320 °C	1	BH90115000050	(1)
29	S4 S5 S6	Thermocouple	SHINI	ST-K	K	3	-----	(1)
30	S7	Dew-point transducer	VASALA	DMT143G	POWER=24VDC OUT=4-20mA	1	YE15041200000	(1) (2)
31	X1	Terminal board	----	35mm^{2}PE	-	1	YE61353500000	
32				6mm^2	-	9	YE61060000000	
33				6mm^{2}PE	-	1	YE61063500000	
34				4mm^2	-	6	YE61040000000	
35				4mm^{2}PE	-	2	YE61043500000	
36				2.5mm^2	-	15	YE61250040000	
37				2.5mm^{2}PE	-	1	YE61253500000	
38	X2	Terminal board	----	2.5mm^2	-	4	YE61250040000	
39				2.5mm^{2}PE	-	1	YE61253500000	
40	FM	Fan	SUNON	DP-200A	230VAC 40W	1	YM60121200400	(1)
41	M1	Blower	SHINI	-----	230V 7.5kW	1	-----	(1)
42	M2	Blower	SHINI	-----	230V 1.5kW	1	-----	(1)
43	M3	Motor	----	-----	230V 0.015kW	1	-----	(1)
44	EH1	Pipe heater	SHINI	-----	230V 24kW	1	-----	(1)
45	EH2	Pipe heater	SHINI	-----	230V 10kW	1	-----	(1)

Notes: (1)Means it's not the material inside the control box. (2)Stands for optional.

Mark	Before modification	After modification	Modified by	Modify date

Drawer		Version	A
Designer		Approved by	
Proofread by			
Checked by		Date	20130825

Title: SDD-900U(1200U)/700H
Electrical Components List 2

Drawing NO.: SDD-PLC-CE-230V-A-20

信易電熱機械股份有限公司
Shini Plastics Technologies, Inc.

Scale		Page	20
Standard	CE	Totally	20 Pages
Voltage	230V		
Frequency	60Hz		