“All-in-One” Compact Dryer

SCD-230U/120H



Refer carefully to the manual before operation.

Coding Principle

SCD- xxxU(×2)/xxxH - xxx

- Options
- Dehumidifying Air Quantity (m^3/hr)
  H: Honeycomb Rotor
- Hopper Quantity
- Hopper Capacity (L)
  U: "U" series
- Shini Compact Dryer



SCD-600U/400H-LC-D



SCD-120U/80H-D-OP-M2

Features

- Combine the function of dehumidifying, drying and two-stage conveying into a single unit.
- Adopt molecular sieve structure honeycomb rotor, which provides low dew-point dry air. The honeycomb rotor structure is superior to double-barrel dehumidifier that will contaminate raw material due to damaged molecular sieve.
- Feeding system is equipped with shut-off valve to ensure no dry materials remain in the material line and avoid dry material from regaining moisture.
- Equipped with microprocessor to accurately control drying temperature.
- Insulation drying hopper adopts down blowpipe design and collocates with cyclone air exhaust to avoid heat lost and improve drying efficiency.
- SCD with two drying hoppers, the drying temperature of single hopper can be individually controlled. It mainly applied to two component molding machine, which can process dehumidifying and drying to two different drying materials.
- Equipped with weekly timer, machine can automatically operate.
- All new highly efficient drying hopper with 14~20% less floor space than the previous version (40U~230U model).



SCD-80U×2/100H

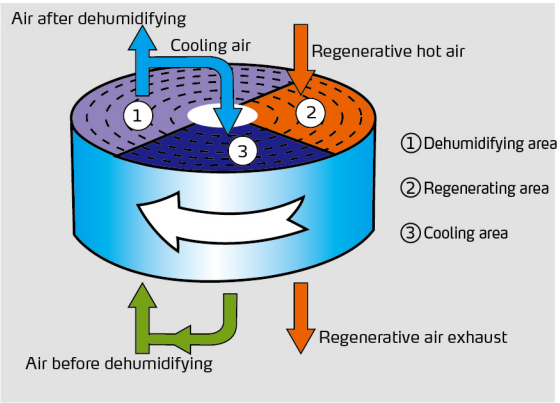

Honeycomb Rotor Working Principle



Touch Control Panel

Application

SCD "All-in-One" portable compact dryers are mainly used for drying, dehumidifying, and conveying hygroscopic plastics, such as PET, PA, and PC etc. The one-to-one (for one set of IMM) or one-to-two (for two sets of IMMs) SCD compact dryers can be used according actual production demands. Besides, the double drying hoppers can be selected to meet the production demands of two component IMM. In addition, there're multiple options and accessories to meet various demands. If dry materials are volatile, it must use the EOF filter, such as PA.

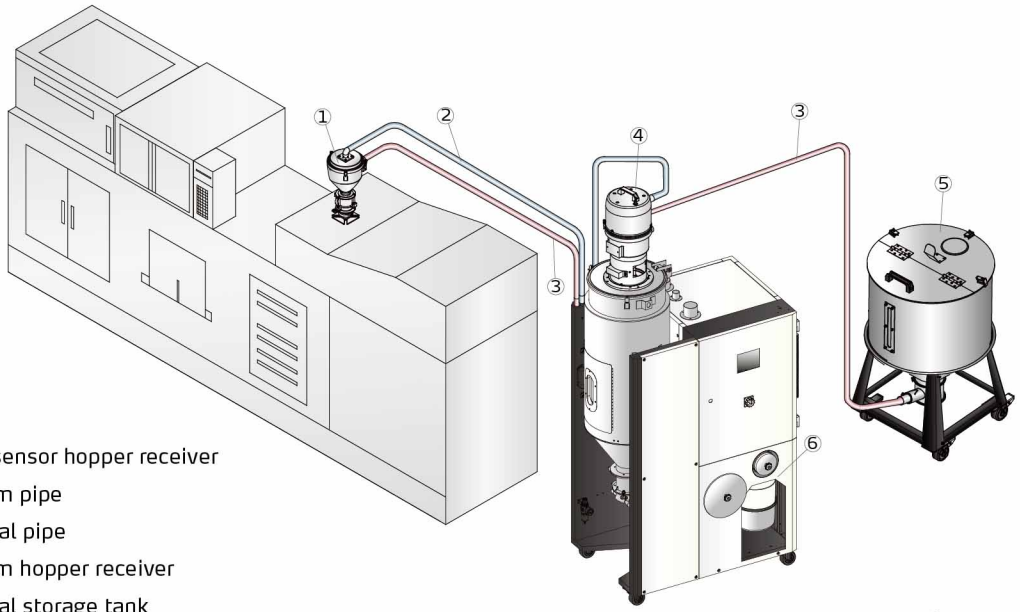

1. Photosensor hopper receiver
2. Vacuum pipe
3. Material pipe
4. Vacuum hopper receiver
5. Material storage tank
6. SCD Main unit

For Servicing One Machine: Two-stage Conveying System (Standard)

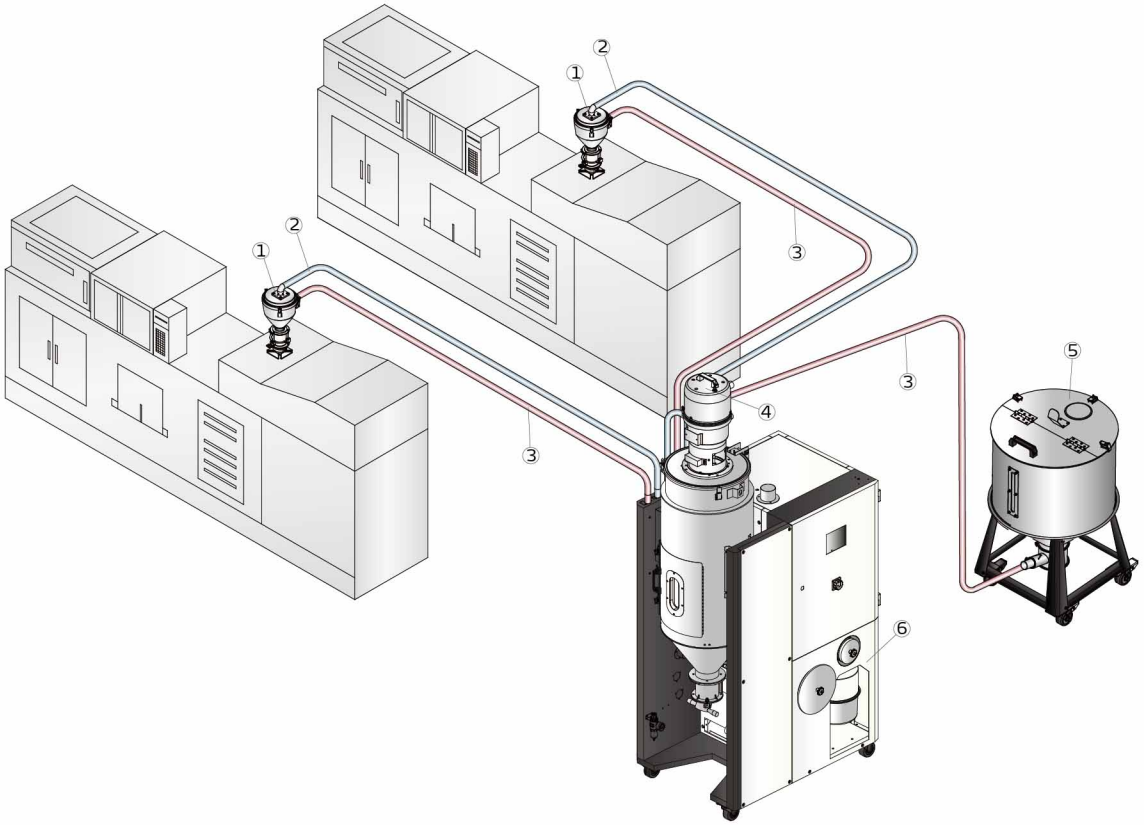

For Servicing Two Machines: Three-stage Conveying System (Optional)

1.Photosensor hopper receiver
2.Vacuum pipe
3.Material pipe
4.Vacuum hopper receiver
5.SCD-80U×2/100H
6.Material storage tank

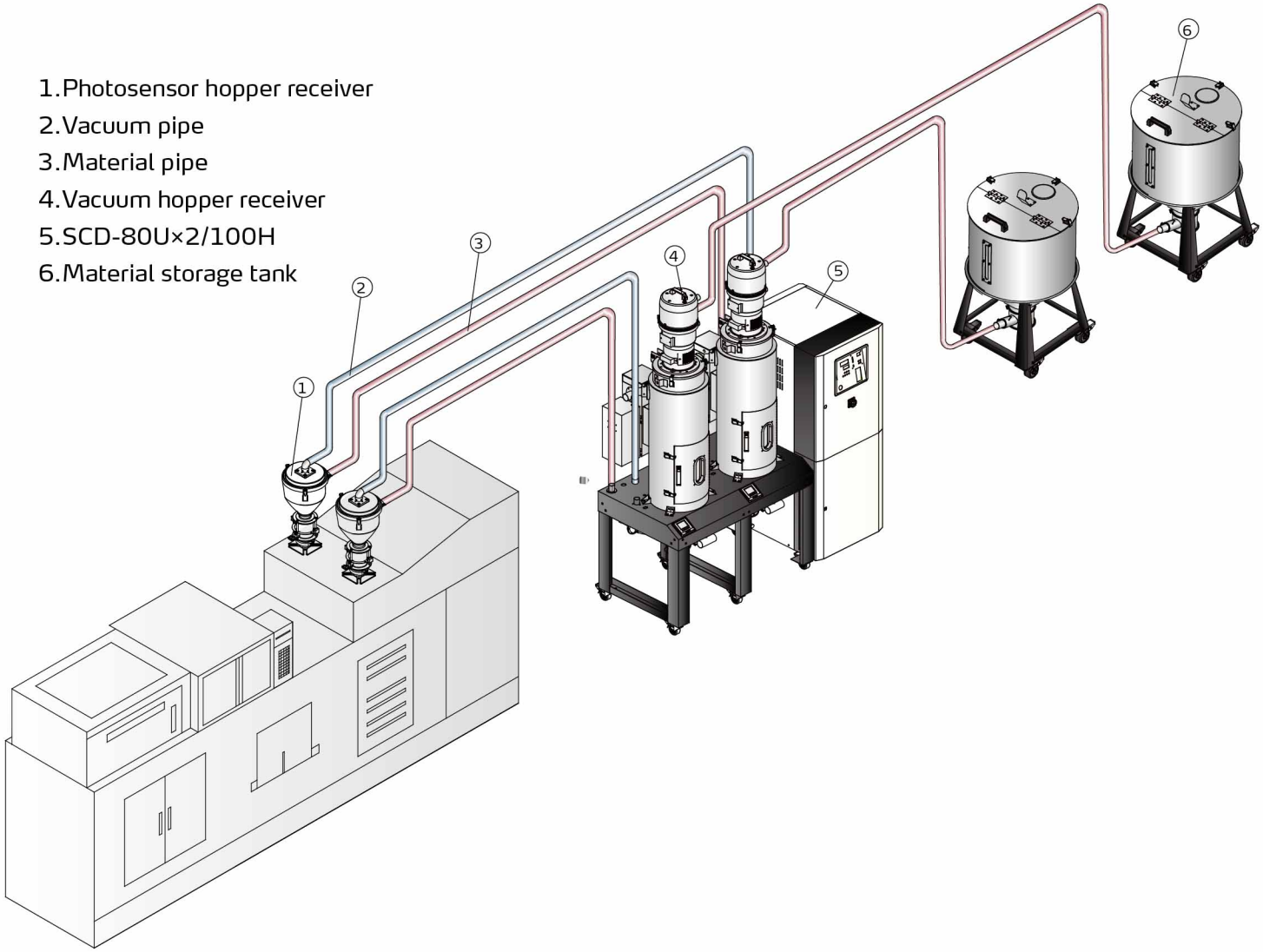

The diagram of “One-to-Two” Compact Dryer

■ Working Principle

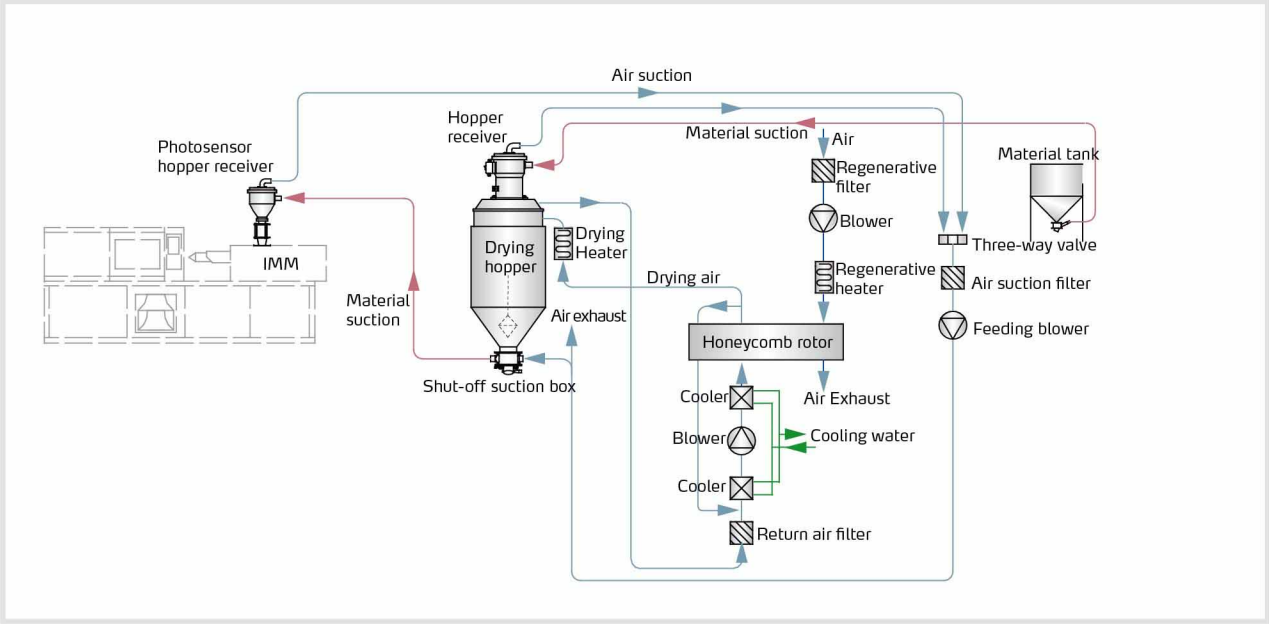

SCD Working Principle

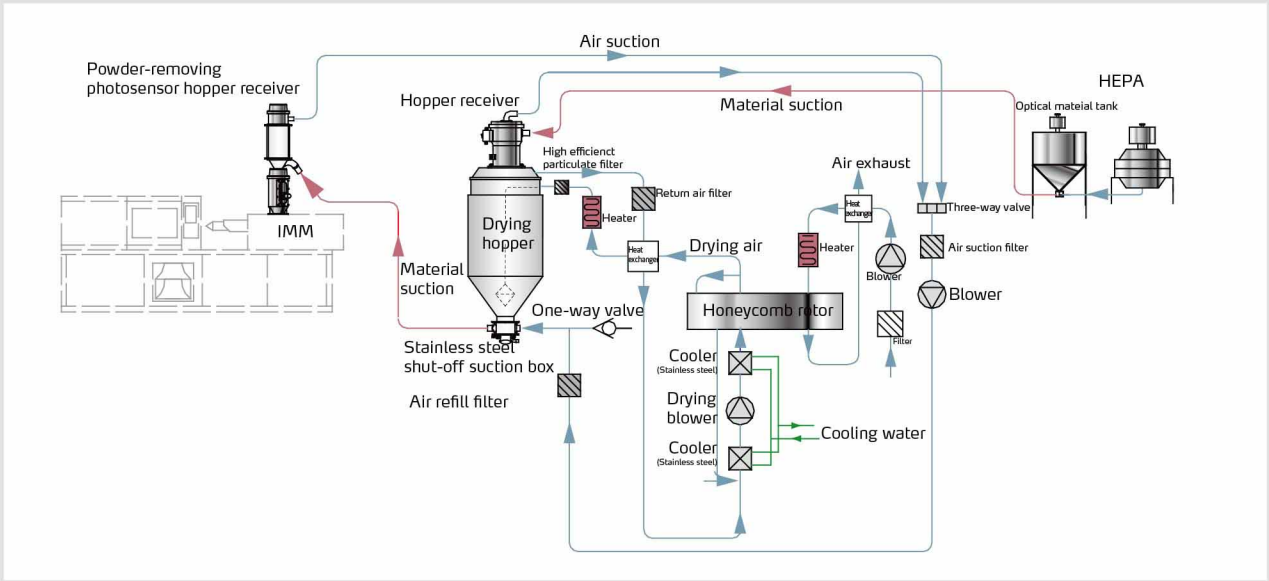

SCD-OP-ES Working Principle

3D animation (Tencent)

3D animation (Youtube)

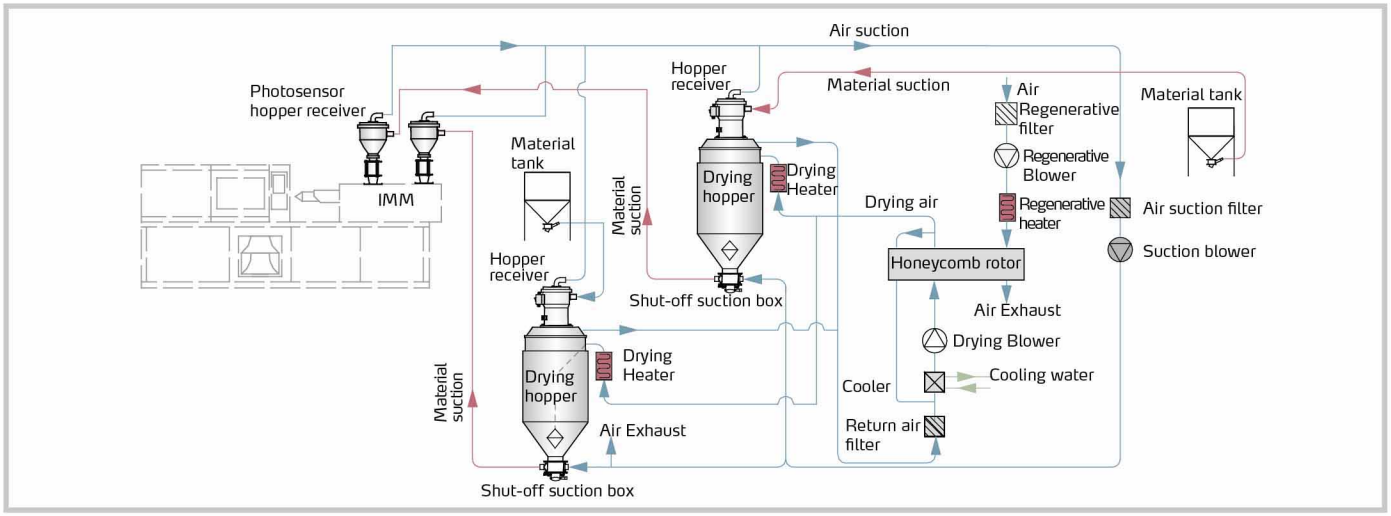

SCD-Ux2/H Working Principle

Options

- For models optional with energy-saving drying function, add "ES"at the end of the model code. Standard equipped with touch panel human-machine interface, it can automatically adjust the energy consumption as per material dosage. Collocated with regenerative heat recycler, total power consumption can be saved up to 41%.
- For models with drying heat recycler, add “HE” at the end of model code. Dehumidified low temperature air recycles the heat of hot-wet return air via plate heat exchanger, which can raise the air temperature in drying heater and reduce the power consumption of the heater, as well as reduce 0%~19% of total power consumption.
- For SCD, three-stage conveying function is available to simultaneously feed two sets of injection molding machines. Add "M2" at the end of the model code.
- For models with polished hopper inside, add "P" at the end of the model code.
- Optional air cooling function is available for SCD, which is no need of cooling water, and add "A" at the end of the model code. It is applicable for (SCD-40U/40H~SCD-230V/120H).
- Upgraded to PLC & touch panel, add "LC" at the end of the model code.
- The optional built-in dew point monitor is available, which is used to monitor real-time dew point. Add “D” at the end of the model code.

Specifications (Hermetic)

Model SCD-			20U/30H -OP	40U/30H -OP	80U/50H -OP	120U/80H -OP	40U/ 40H	80U/ 40H	120U/ 80H	160U/ 80H	160U/ 120H	230U/ 120H	300U/ 200H	450U/ 200H
Drying System	Drying Heater (kW)		3	3	4	6	4	4	4	4	6	6	12	12
	Drying Blower (kW)		0.4	0.4	0.4	0.75	0.18	0.18	0.75	0.75	0.75	0.75	1.5	1.5
	Hopper Capacity	L	20	40	80	120	40	80	120	160	160	230	300	450
		gal	5.3	10.6	21.1	31.7	10.6	21.1	31.7	31.7	42.3	60.8	79.3	119
Dehumidifying System	Regenerative Heater (kW) (50/60Hz)		3/3	3/3	3/3	3/3	3/3	3/3	3/4	3/4	4/4	4/4	4/6	4/6
	Regenerative Blower (kW)		0.4	0.4	0.4	0.4	0.12	0.12	0.18	0.18	0.18	0.18	0.4	0.4
	Dehumidifying Air quantity (m^3/hr)		30	30	50	80	40	40	80	80	120	120	200	200
Conveying System	Conveying Blower (kW)		1.5	1.5	1.5	1.5	1.5	1.5	1.5	1.5	1.5	1.5	1.5	1.5
	Dia. of Material Pipe (inch)		1.5	1.5	1.5	1.5	1.5	1.5	1.5	1.5	1.5	1.5	1.5	1.5
	SVH-L	L	3*	3*	3*	3*	3	6	6	6	6	12	12	12
		gal	0.8*	0.8*	0.8*	0.8*	0.8	1.6	1.6	1.6	1.6	3.2	3.2	3.2
	SHR-U	L	3	3	6	6	3	6	6	6	6	12	12	12
		gal	0.8	0.8	1.6	1.6	0.8	1.6	1.6	1.6	1.6	3.2	3.2	3.2
Dimension	H	mm	1400	1500	1670	1710	1672	1751	1957	2102	2102	2012	2160	2350
		inch	55	59	65.7	67.3	65.8	68.9	77	82.8	82.8	82.8	85	92.5
	W (mm)	mm	1050	1050	1240	1240	1051	1066	1125	1125	1125	1223	1460	1460
		inch	41.3	41.3	48.8	48.8	41.4	42	44.3	44.3	44.3	48.1	57.5	57.5
	D (mm)	mm	900	900	1000	1000	903	903	903	903	903	903	1020	1020
		inch	35.4	35.4	39.4	39.4	35.6	35.6	35.6	35.6	35.6	35.6	40.2	40.2
Weight		kg	235	280	330	385	295	325	340	350	390	420	565	595
		lb	518	617	728	849	650	1433	750	772	850	926	1246	1312

Outline Drawings

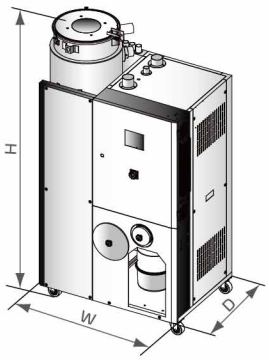

SCD Hermetic

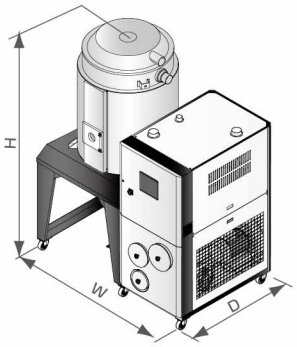

SCD Semi-open

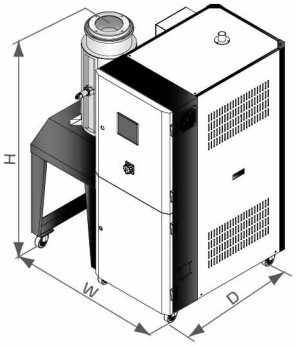

SCD-OP

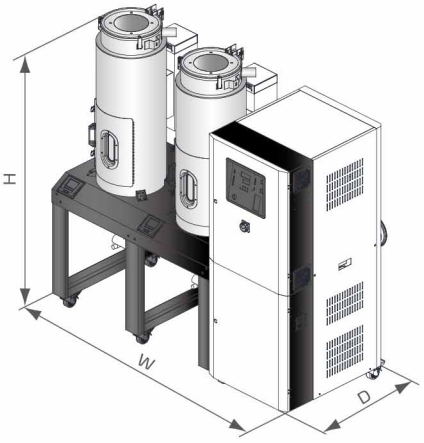

SCD-U×2/H

Specifications (Semi-open)

Model	SCD-		600U/400H	750U/400H	900U/700H	1200U/700H	40U×2/80H	80U×2/80H	120U×2/120H	160U×2/200H
Drying System	Drying Heater (kW)		18	18	24	24	3×2	3.9×2	3.9×2	6×2
	Drying Blower (kW, 50/60Hz)		3.75/4.5	3.75/4.5	7.5/8.6	7.5/8.6	0.75/0.9	0.75/0.9	0.75/0.9	1.5/1.72
	Hopper Capacity	L	600	750	900	1200	40×2	80×2	120×2	160×2
		gal	158.5	198	237.8	317	10.6×2	21.1×2	31.7×2	42.2×2
Dehumidifying System	Regenerative Heater (kW)		7.2	7.2	10	10	3	3	4	4
	Regenerative Blower (kW, 50/60Hz)		0.75/0.9	0.75/0.9	1.5/1.8	1.5/1.8	0.18/0.225	0.18/0.225	0.18/0.225	0.4/0.48
	Dehumidifying Air quantity (m^3/hr, 50/60Hz)		400/450	400/450	700/780	700/780	80/80	80/80	120/120	200/222
Conveying System	Conveying Blower (kW)		1.5	1.8	3.75		1.5	1.5	1.5	1.5
	Dia. of Material Pipe (inch)		1.5		2		1.5	1.5	1.5	1.5
	SVH-L Hopper	L	12		24		6	6	6	6
		gal	3.2		6.4		1.58	1.58	1.58	1.58
	SHR-U Hopper	L	12		24		3	6	6	6
		gal	3.2		6.4		0.79	1.58	1.58	1.58
Dimension	H	mm	2380	2610	2640	3070	1655	1866	1800	2113
		inch	93.7	102.8	104	121	65.2	73.5	73.5	83.2
	W	mm	1745		2140		1422	1886	2084	2124
		inch	68.7		84.3		56	74.3	82	83.6
	D	mm	1255		1380		853	915	915	930
		inch	49.4		54.3		33.6	36	36	36.6
Weight		kg	640	690	850	900	320	400	500	565
		lb	1411	1521	1874	1984	704	882	1102.7	1246

Notes: 1) Plastic materials can be fully dried by drying air with dew-point temperature ≤-20°C.
2) "*" stands for hopper receiver SHR-CP-U.
3) Power: 3Φ, 230/400/460/575VAC, 50/60Hz.

We reserve the right to change specifications without prior notice.

Shini Group

Addr: No. 23, Minhe St., Shulin Dist.,
New Taipei, Taiwan

Tel: +886 2 2680 9119

Fax: +886 2 2680 9229

Email: shini@shini.com

Factories:

- Taiwan
- Dongguan
- Pinghu
- Ningbo
- Chongqing
- Pune

2026-06-15-04 Copyrights Reserved.